High Voltage Leak Detection: Convel Techniques, Solutions and Product Portfolio

Andrea Simonetti
Convel Srl, Italy

High Voltage Leak Detection – HVLD

❑ Deterministic Leak Test Technology(*)

Deterministic Leak Test Technologies	Package Content Requirements	Package Requirements	Leak Detection Limit[b]	Measurement Outcome and Data Analysis	Effect of Method on Package	Test Time Order of Magnitude
Electrical conductivity and capacitance (high-voltage leak detection)	Liquid (with no combustion risk) must be more electrically conductive than package. Product must be present at leak site.	Less electrically conductive than liquid product.	Row 3 Varies with product–package, instrument, test sample fixtures, and method parameters.	Quantitative measure of electrical current passing through the test sample: provides an indirect determination of leak presence and leak location as shown by a drop in test sample electrical resistivity, with a resultant increase in voltage reading above a predetermined pass/fail limit.	Nondestructive, although impact of test exposure on product stability is recommended	Seconds

- *"…Deterministic methods are characterized as being capable of reproducibly detecting leaks at clearly defined and predictable detection limits…"*
- *"…A deterministic leak test method having the ability to detect leaks at the product's maximum allowable leakage limit is preferred when establishing the inherent integrity of a container–closure system…"*

(*) United States Pharmacopoeia – USP <1207.2> Package Integrity Leak Test Technologies

HVLD – Overview

- Description of the Method:
  - HVLD method exploits the electrical conductivity of the packaged liquid product in an electrically insulated container
  - A high-frequency high-voltage potential is applied to the container by two electrodes and discharge current is measured
  - If cracks or pinholes are present on the container surface, the circuit capacitance is shorted while the current flow between the electrodes increases and waveform signal becomes asymmetric

HVLD – Principle

- Logic Circuit Equivalence
  - C1 = capacitive coupling between electrode 1 and liquid product
  - RL = liquid product resistance
  - C2: capacitive coupling between measurement electrode and liquid product
  - RS = shunt resistance used in the measurement circuit
  - HV = High Voltage generator

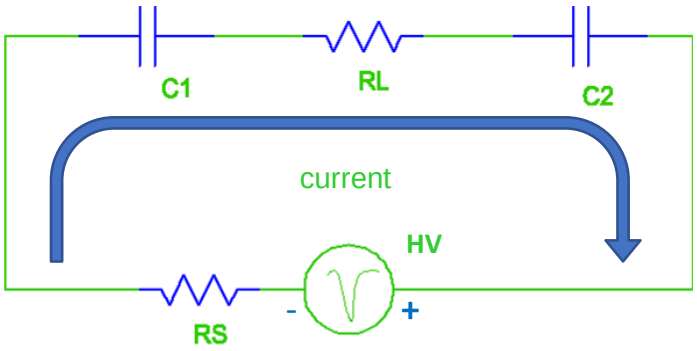

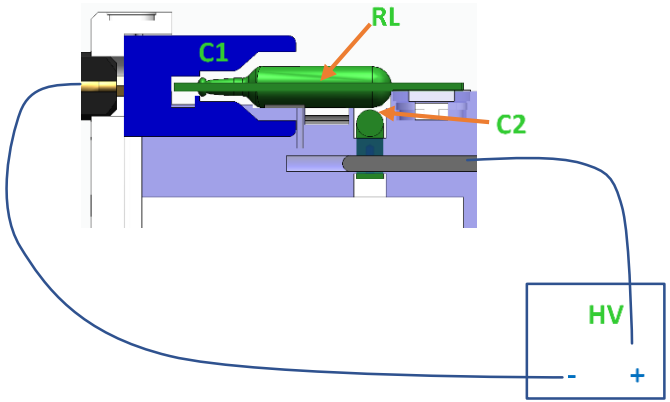

HVLD – Application

- Conforming Container
  - Equivalent circuit remains the same
  - I (*) does not flow through the liquid product
  - I (*) flows at a low value (capacitive only)
  - Container closure integrity demonstrated

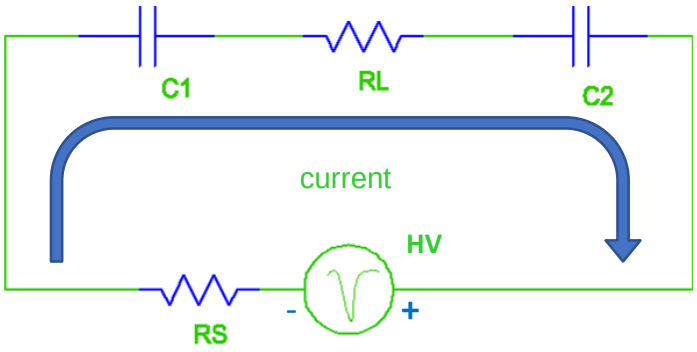

(*) I = current

HVLD – Application (cont'd)

- Defective Container
  - V(**) ↑, discharge is made through the leak
  - I (*) flows through the liquid product
  - Headspace gas temperature ↑, C1 is shorted
  - I (*) value is proportional to RL
  - Difference between conforming and defective containers is evident

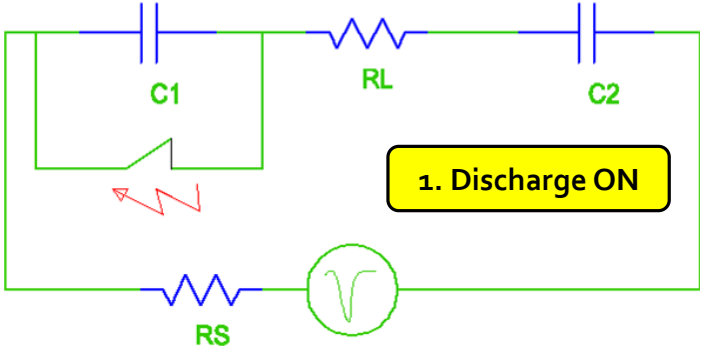

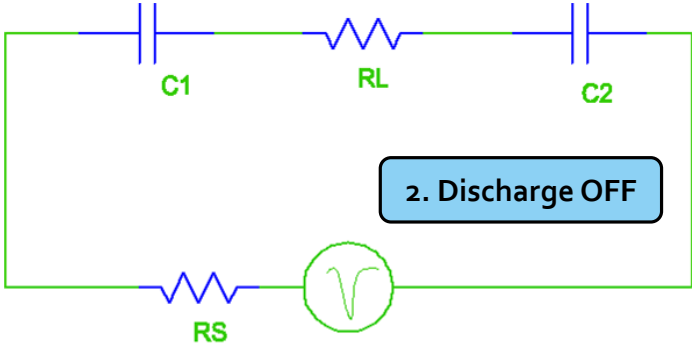

(*) I = current; (**) V = potential difference between electrodes

HVLD – Current - Voltage Characteristics

- Typical I-V Curves:
  1. Conforming Container
  2. Defective Container

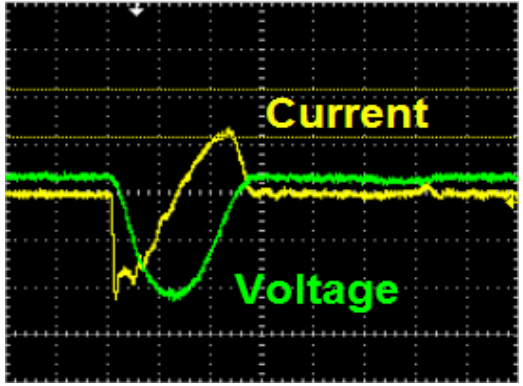

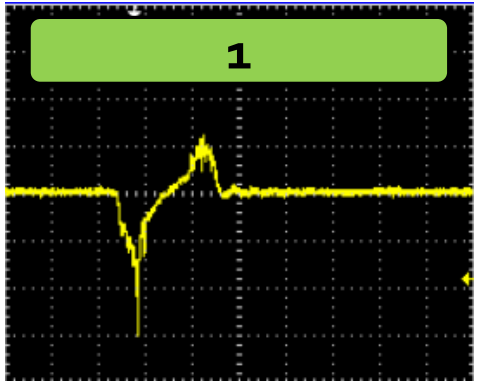

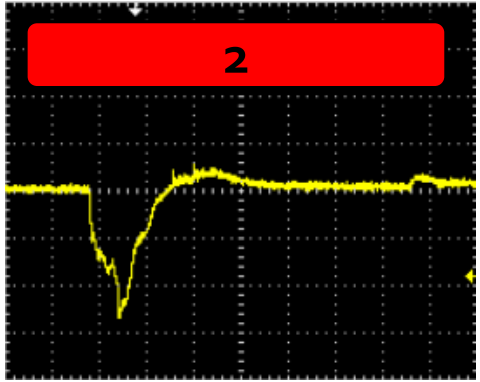

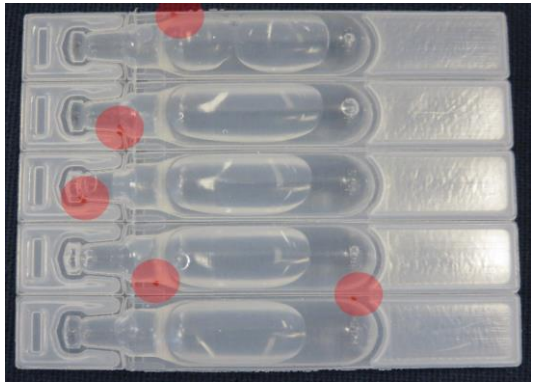

Traditional Peak Based HVLD System

- The traditional leak test equipment principle is based on the measurement of the current peak
- HV generator system:
  - Generation of a sequence of pulses
  - Pulses amplitude is set in the recipe
  - Calculation of Vp and Vm:

a) $Vp = Max[i(t)]$

b) $Vm = Max(n)\{\int_{t0}^{t1} |i(t)|\sigma(t-t0)dt\}; \int_{t1}^{t2} |i(t)|\sigma(t-t1)dt\}; \ldots; \int_{tn}^{tn+1} |i(t)|\sigma(t-tn)dt\};$

- $\sigma(t) = \begin{cases} 1; for\ 0 \le t - nTp \le Ts \\ 0;\ else \end{cases}$

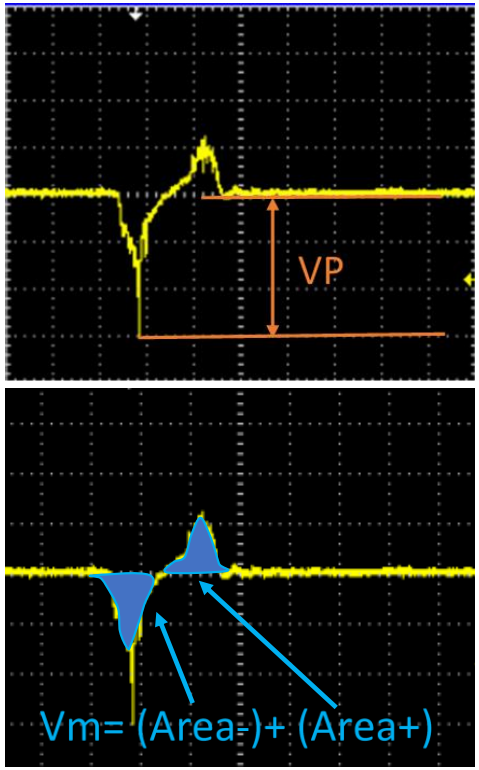

Traditional Peak Based HVLD System – Pros & Cons

Advantages	Disadvantages
❑ The measure of Vm in addition to Vp allows to: ➢ Distinguish real leakages from weak pulses ❑ Weak pulses can be generated in case of container surface slightly conductive ❑ Typical cases are dirty containers of slightly wet	❑ Low sensitivity in case of: ➢ Low liquid product conductivity ➢ Integrity defects small in size ➢ Container large wall thickness ➢ Large containers and fill volume ➢ Widespread electrodes

Convel HVLD System – Patent EP 2365309

- Need to overcome the limitations of traditional HVLD systems
- Assessment of:
  - large containers
  - low fill volumes
  - low product conductivity (< 5µS)
- EP 2365309: *"Method for controlling the sealing of a cap on a container and apparatus for controlling the above-mentioned sealing"*

Convel HVLD System – Patent EP 2365309

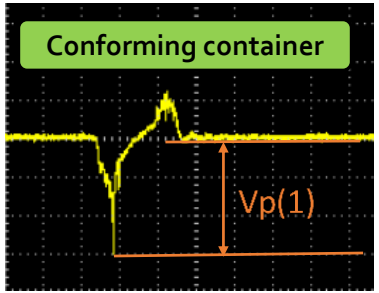

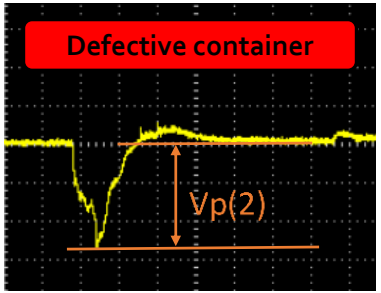

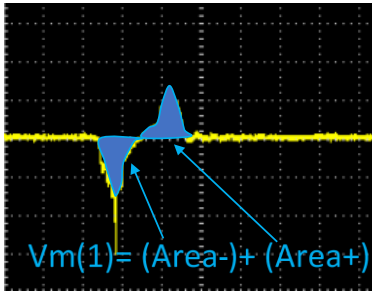

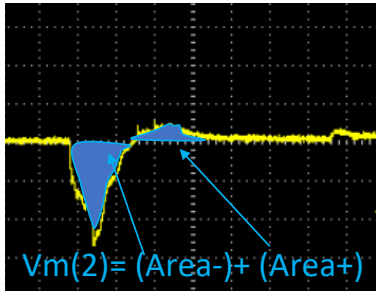

- Vp(2) ≈ Vp(1)
- (!) It should be Vp(2) >> Vp(1)
- Vm(2) ≈ Vm(1)
- Traditional peak based system does not distinguish conforming and defective containers easily

Convel HVLD System – Patent EP 2365309 (cont'd)

- Measurement mode changed:
  - Vf instead of Vm

a) $Vf = Max(n)\{\int_{t0}^{t1} i(t)\sigma(t-t0)dt\}; \int_{t1}^{t2} i(t)\sigma(t-t1)dt\}; \ldots; \int_{tn}^{tn+1} i(t)\sigma(t-tn)dt\};$

- $\sigma(t) = \begin{cases} 1; for\ 0 \le t - nTp \le Ts \\ 0;\ else \end{cases}$

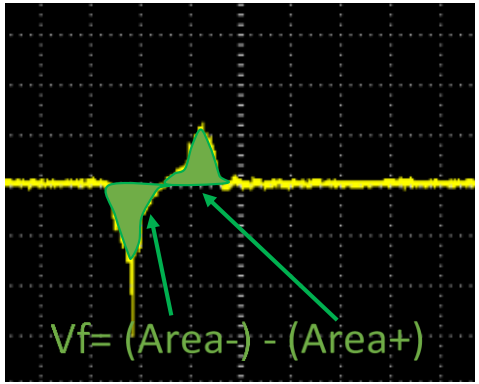

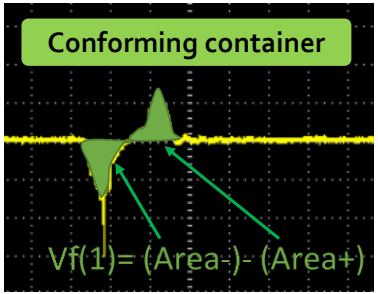

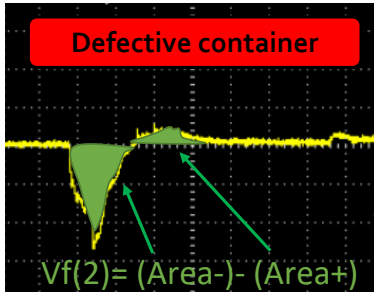

- Vf(1) ≈ 0
- Vf(2) >> 0
- Convel Patented system distinguishes conforming and defective containers

Convel HVLD System – Physical Meaning of Vf

- Vf:
  - Represents the total residual charge transferred from the HV generator both to the container (<<) and to the product (>>)
  - Convel HVLD system therefore measures the amount of total residual charge

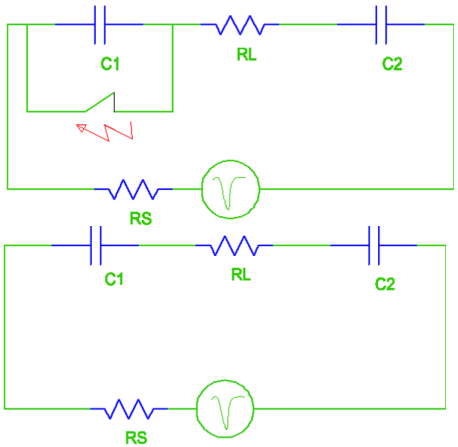

- When discharge is interrupted the electrical charge on C2 does not have an electrical path available
- This charge is trapped into the container

Convel HVLD System – Decision Making

- Criteria for approval and rejection are established by comparing respectively:

1. Discharge current peak to an upper bound (Peak% threshold)
2. Discharge average value (patented analysis method) to an upper bound (Average% threshold)

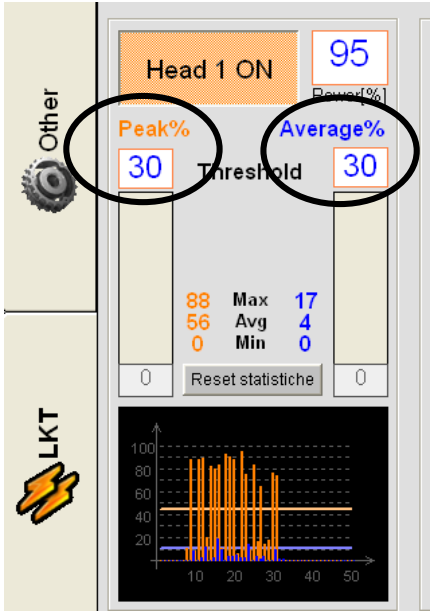

- ➢ The container is classified as conforming if:
  - ✓ Peak ≤ Peak% threshold OR
  - ✓ Average ≤ Average% threshold
- ➢ …otherwise the container is rejected

Convel HVLD System – Key Points / Advantages

- Measurement capability: wider region between good and bad population
- Sensitivity:
  - Underfilled containers
  - Liquid products with low conductivity (< 5µS)
- Reduced number of recipe parameters (just power and 2 thresholds)
- Low energy involved in the test process (< 80mJ)
- Small voltage potential applied (15-28 kV; typically 70% = 19 kV)

Convel’ Patents

APTA

Spettabile
CONVEL S.R.L.
c.a. Ggr. Ingg. Levato e Gallo
Via Meringue Partita, 161
36015

CORRIERE

No. rif.: 5492 DI Padova, 9 luglio 2007

Oggetto: Deposito nuova domanda di brevetto per invenzione industriale in ITALIA
A nome: CONVEL S.R.L.
Titolo: "APPARECCHIATURA PER L'ISPEZIONE DI CONTENITORI"
Domanda n. PD2007A000034, depositata il 02/02/2007

Come da Vostre gentili istruzioni, abbiamo provveduto al deposito della domanda di brevetto in oggetto di cui Vi trasmettiamo la seguente relativa documentazione:

- copia del verbale di deposito,
- copia della descrizione, rivendicazioni e disegni come depositati;
- modulo per la richiesta di provvisorio per l'estensione all'estero.

ESTENSIONI ALL'ESTERO DEL BREVETTO

Vi informiamo che la domanda di brevetto per invenzione industriale può essere estesa all'estero rivendicando la priorità italiana, purché sia avvenga rigorosamente entro e non oltre il:

2 FEBBRAIO 2008

Nel caso in cui siate interessati a muovere un provvisorio di opposizione all'estero della Vostra domanda di brevetto, Vi invitiamo a notificarci entro circa sei mesi dal ricevimento della presente il modulo qui allegato, con l'indicazione dei paesi di Vostro interesse.

Cordiali saluti.

APTA
Ing. Paolo Gallo

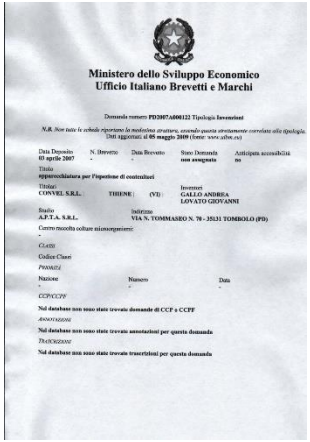

Ministero dello Sviluppo Economico
Ufficio Italiano Brevetti e Marchi

Domanda numero **PD2007A000122** Tipologia **Invenzioni**

N.B. *Non tutte le schede riportano la medesima struttura, secondo quanto strettamente correlato alla tipologia.*
Dati aggiornati al **05 maggio 2009** (fonte www.uibm.gov)

Data Deposito	N. Brevetto	Data Brevetto	Stato Domanda	Anticipata accessibilità
03 aprile 2007	-	-	**non assegnata**	**no**

Titolo
apparecchiatura per l'ispezione di contenitori

Titolari
CONVEL S.R.L. THIENE (VI)

Inventori
GALLO ANDREA
LOVATO GIOVANNI

Studio
A.P.T.A. S.R.L.

Indirizzo
VIA N. TOMMASEO N. 70 - 35131 TOMBOLO (PD)

Centro raccolta colture microorganismi:
-

CLASS
Codice Classe

PRIORITÀ

Nazione	Numero	Data
-	-	-

CCP/CCPF
Nel database non sono state trovate domande di CCP o CCPF

ANNOTAZIONI
Nel database non sono state trovate annotazioni per questa domanda

TRASCRIZIONI
Nel database non sono state trovate trascrizioni per questa domanda

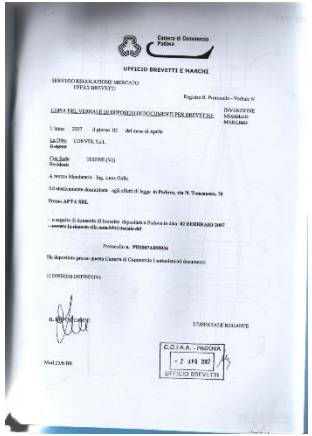

Camera di Commercio Padova

UFFICIO BREVETTI E MARCHI

SERVIZIO REGOLAZIONE MERCATO
UFFICI BREVETTI

Registro II. Protocollo - Verbali N

COPIA DEL VERBALE DI DEPOSITO DI DOCUMENTI PER BREVETTO

DIVISIONE MERCATO MERCIMO

L'anno 2007 il giorno 02 del mese di Aprile

In ORE CONVEL S.r.l.
Si opera

Con sede THIENE (VI)
Residente

A mezzo Mandatario: Ing. Luca Gallo

Ed debitamente domiciliato agli effetti di legge in Padova, via N. Tommaseo, 70

Presso APTA SRL

- copia di domanda di brevetto depositata a Padova in data 02 FEBBRAIO 2007
- copia di domanda di marchio depositata a Padova in data

Protocollo n. PD2007A000034

Ha depositato presso questa Camera di Commercio i seguenti documenti:

IL DIPENDENTE DELEGATO

IL DIPENDENTE DELEGATO

Mod.22/B BR

C.C.I.A.A. - PADOVA
- 2 APR 2007
UFFICIO BREVETTI

Ministero dello Sviluppo Economico
Ufficio Italiano Brevetti e Marchi

Domanda numero **PD2007A000034** Tipologia **Invenzioni**

N.B. *Non tutte le schede riportano la medesima struttura, secondo quanto strettamente correlato alla tipologia.*
Dati aggiornati al **05 maggio 2009** (fonte www.uibm.gov)

Data Deposito	N. Brevetto	Data Brevetto	Stato Domanda	Anticipata accessibilità
02 febbraio 2007	-	-	**non assegnata**	**no**

Titolo
apparecchiatura per l'ispezione di contenitori

Titolari
CONVEL S.R.L. THIENE (VI)

Inventori
GALLO ANDREA
LOVATO GIOVANNI

Studio
A.P.T.A. S.R.L.

Indirizzo
VIA N. TOMMASEO N. 70 - 35131 TOMBOLO (PD)

Centro raccolta colture microorganismi:
-

CLASS
Codice Classe

PRIORITÀ

Nazione	Numero	Data
-	-	-

CCP/CCPF
Nel database non sono state trovate domande di CCP o CCPF

ANNOTAZIONI
Nel database non sono state trovate annotazioni per questa domanda

TRASCRIZIONI
Nel database non sono state trovate trascrizioni per questa domanda

- Our Patents:
  - *Demonstrate intellectual property ownership*
  - *Reveal an enhanced understanding of innovation, technology and science*
  - *Are definitely unique in the field of CCI systems manufacturers and suppliers*

Convel Handling System – Patent PD 2007A000122

- Patented solution for transporting and tilting the containers during inspection phase

- Containers are:

  1. Tilted down to horizontal position by means of an external upper guide

  2. Vibrated, handled and rotated around its axis to get the inner sidewalls completely wet

  3. Driven by an external cam and the central star wheel itself to the inspection area

- PD 2007A000122: "Apparecchiatura per l'ispezione di contenitori"

Convel Handling System – Key Points / Advantages

- Simplicity: instead of more complex solutions
- Flexibility: applicable to majority of containers
- Effectiveness and reliability
- Robustness
- Precision of detection
- Reduction of format changeover time
- Smaller equipment size, compact layout
- Easier positioning and setup of HVLD electrodes

Convel' Leak Detection Product Portfolio

Laboratory Equipment	Production Equipment		
Easy TS	TC	TS	TP TL

Convel Offer – Laboratory Equipment

- Easy TS Equipment:
  - ✓ Compact and reliable table top bench suitable for testing a wide range of packages such as glass ampoules, cartridges, syringes, vials, bottles, BFS and FFS packages
  - ✓ Up to 1000ml

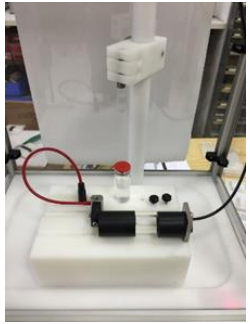

Vials

BFS and FFS Strips / Cards

BFS and FFS Bottles

Glass Ampoules

Glass Bottles

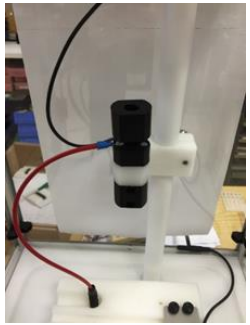

Prefilled Syringes

Convel Offer – Laboratory Equipment (Cont'd)

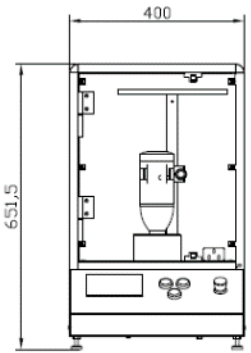

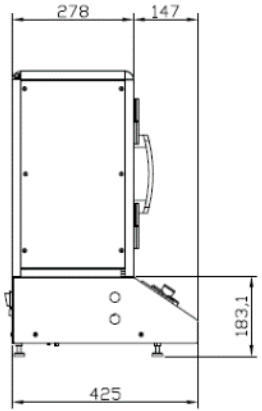

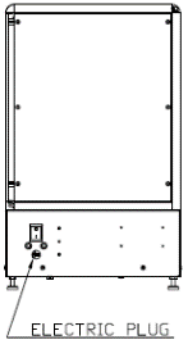

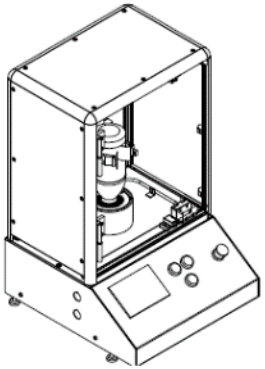

Dimensions (LxWxH)

450 x 400 x 650

Weight

15 Kg

Electrical / Power

230V ± 10% 50/60Hz 1 Ph 250W

Containers dimensions

1 to 1000 ml

Containers types

Ampoules, cartridges, vials, bags, bottles, BFS

Test time

30ms – 200ms

Voltage applied to the container

Up to 28 kV

Convel offer – 100% Automated Leak Detection

❑ HVLD Method

TC	TS	TP
Speed: 12.000 units per hour	Speed: 24.000 units per hour	BFS Applications: ampoule strips / multidose, Bottles
Glass applications: vials, ampoules, cartridges	Glass applications: vials, ampoules, cartridges	Speed: 7.200 units per hour (ampoules)
Container diameter: 8-42,5 mm	Container diameter: 8-42,5 mm	Speed: 2.200 units per hour (bottles)

100% On-Line Equipment – TC

Model «TC»

- Up to 12000 pieces per hour
- Ampoules, vials, cartridges
- Container Diameter range: 8,65-42,5 mm
- Container Height range: 35-100 mm
- HVLD Method
- Product min conductivity: 1-5 µS/cm

Features and tools:

1. *Vibrating system allowing to make the container internal surface wet by the liquid product*
2. *4 HVLD Units: CCIT is repeated four times, each electrode test condition is independent*
3. *Ozone extraction system, catalytic ozone destructor available as an option*

100% On-Line Equipment – TC (cont'd)

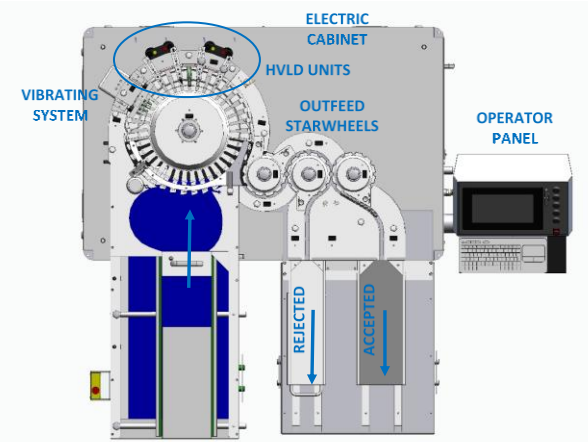

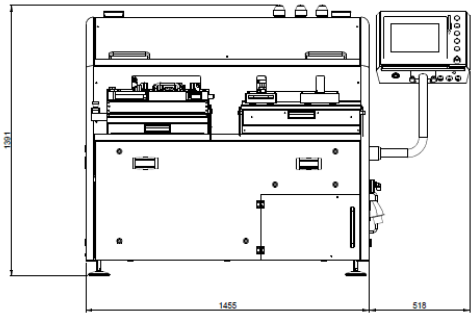

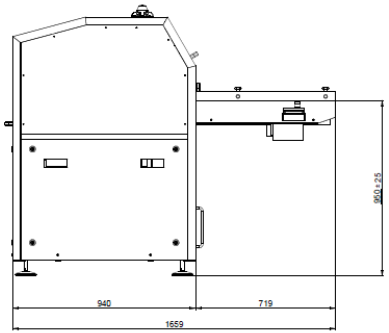

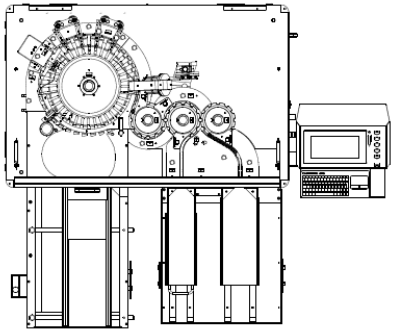

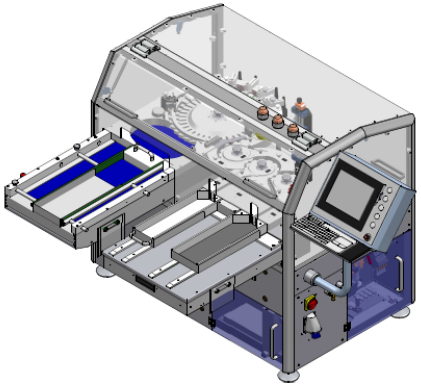

100% On-Line Equipment – TS

Model «TS»

- Up to 24000 pieces per hour
- Ampoules, vials, cartridges
- Container Diameter range: 8,65-42,5 mm
- Container Height range: 35-100 mm
- HVLD Method
- Product min conductivity: 1-5 µS/cm

Features and tools:

1. *Vibrating system allowing to make the container internal surface wet by the liquid product*
2. *4 HVLD Units: CCIT is repeated four times, each electrode test condition is independent*
3. *Ozone extraction system, catalytic ozone destructor available as an option*

100% On-Line Equipment – TS (cont'd)

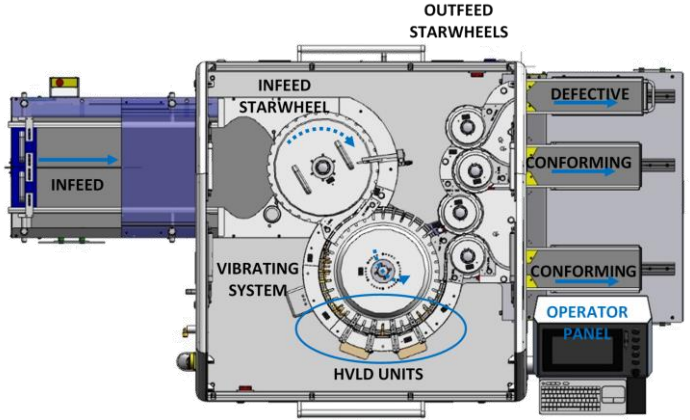

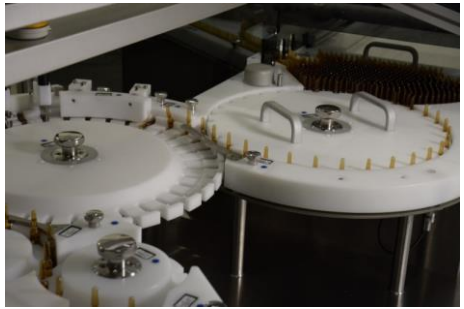

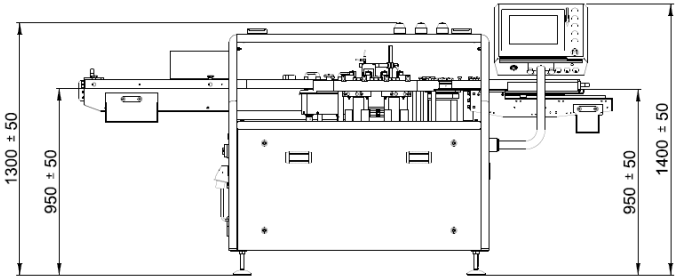

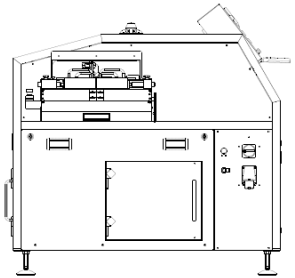

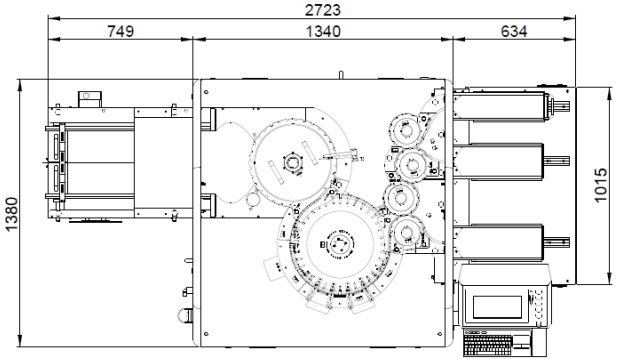

100% On-Line Equipment – TP

Model «TP»

- Up to 7200 vial cards per hour
- Up to 2200 bottles per hour
- BFS strip max size: 130 x 90 x 20
- BFS strip fill level: [0,2 – 10] ml
- BFS bottle capacity: up to 500 ml
- HVLD Method
- Product min conductivity: 1-5 µS/cm

Features and tools:

1. *Vibrating system allowing to make the container internal surface wet by the liquid product*
2. *4 HVLD Units: CCIT is repeated four times, each electrode test condition is independent*
3. *Ozone extraction system, catalytic ozone destructor available as an option*
4. *Capability to handle monodose containers also*

100% On-Line Equipment – TP (cont'd)

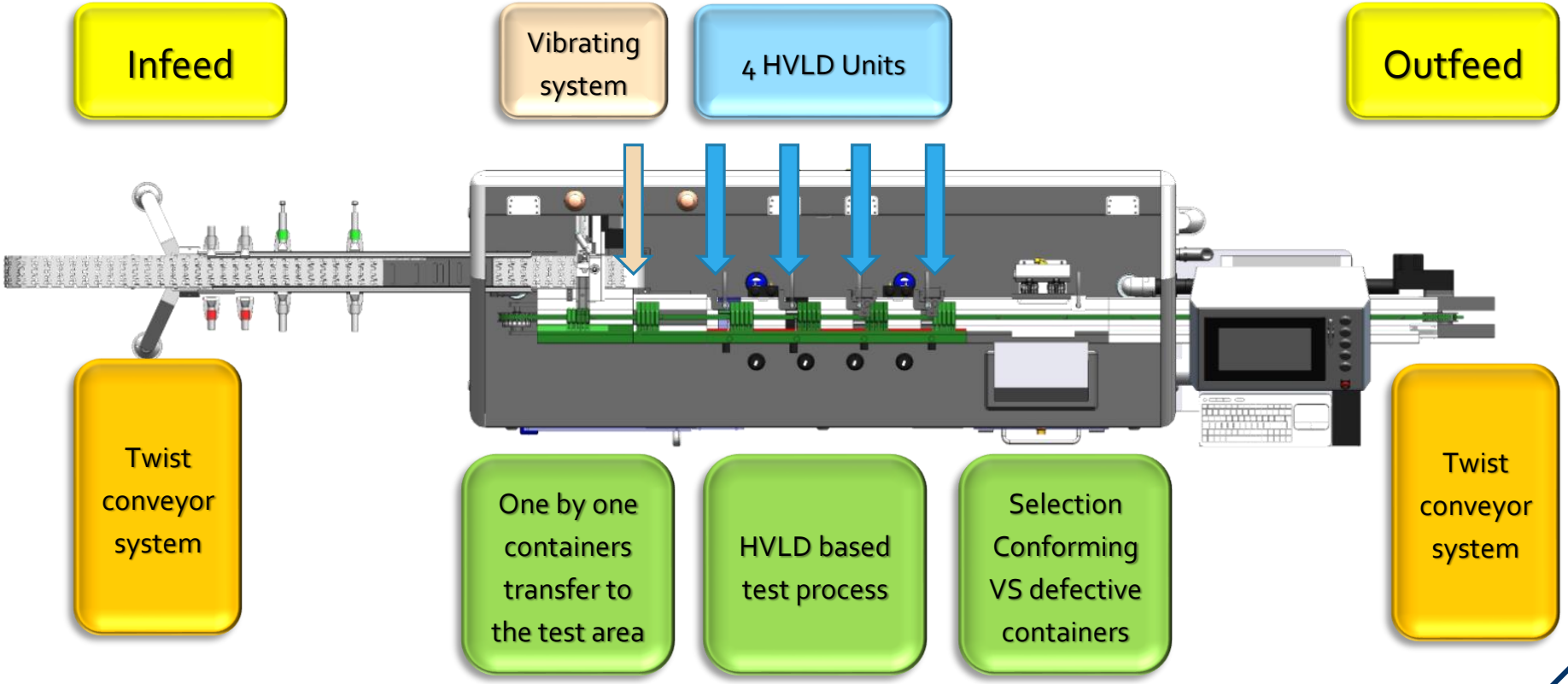

HMI: Common to all Production Equipment

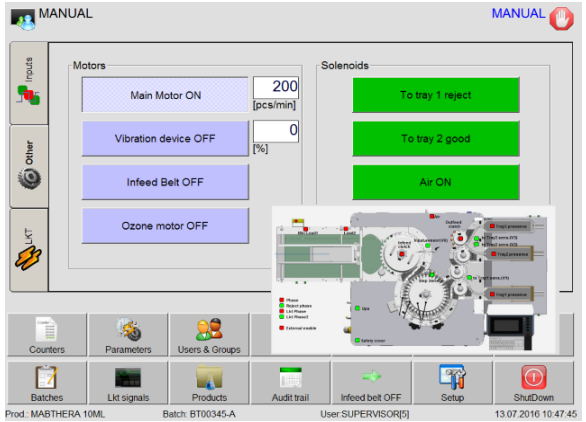

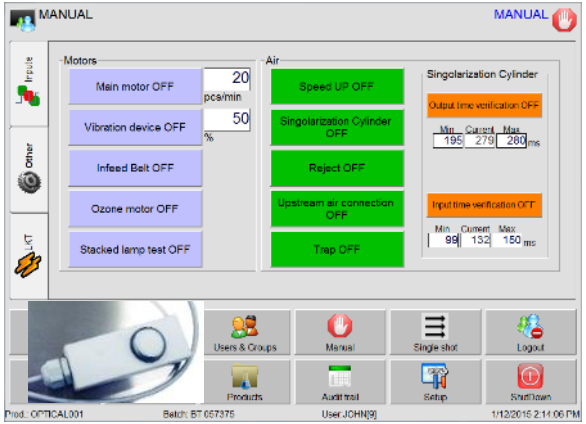

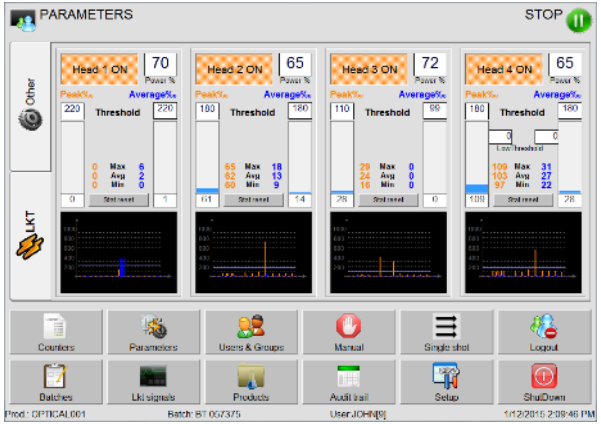

Maintenance

Diagnostics and settings

Configuration and Control

- *21CFRp11 compliance – ER/ES, audit trail, system access limited to 5 levels of authorized individuals*
- *Full remote assistance system*
- *High voltage auto-diagnostics system achieved by calibrated load*