Visual Inspection: Convel Techniques, Solutions and Product Portfolio

Andrea Simonetti
Convel Srl, Italy

Overview

- 100% Visual inspection is a mandatory practice for injectable manufacturers to guarantee both quality and patient safety
- Sterile pharmaceutical and biological drug products are inspected to labeling to ensure that
  - The drug product container meets predetermined specifications for container/closure integrity; in particular the container is to be free of defects that could lead to a breach in sterility
  - The drug product be free of visible particulate matter

Regulatory Requirements (1)

- EU GMP: Annex 1 – Manufacture of Sterile Medicinal Products
  - #124 – *Filled containers of parenteral products should be inspected individually for extraneous contamination or other defects (…)*
- WHO Annex 6 – GMP for sterile pharmaceutical products
  - *#13.8 – Filled containers of parenteral products should be inspected individually for extraneous contamination or other defects (…)*
- USP 37: <1> Injections – Foreign and Particulate Matter
  - *(…) Each final container of all parenteral preparations shall be inspected to the extent possible for the presence of observable foreign and particulate matter (…). Every container that shows evidence of visible particulates shall be rejected*

Regulatory Requirements (2)

- FDA: Sterile Drug Products Produced by Aseptic Processing – Current Good Manufacturing Practice, September 2004
  - #2. Inspection of Container Closure System: *"Defective units should be detected, and removed during inspection process (…)"*

"I'm sure you've cringed when you heard some of the stories – glass shards and other particulates in products, leaking IV bags, too much medication in syringes; bacterial and endotoxin contamination found in products manufactured in aging sterile injectables facilities …. These are not the norm, but they are warning signals that we can and must do more"

Margaret Hamburg, FDA Commissioner, February 12, 2013

Applications

- Package systems – empty / filled:
  - Vials
  - Bottles
  - Ampoules
  - Pre-Filled Syringes
  - Cartridges
  - BFS / FFS
  - IV Bags
  - …

- Defects to be Detected:
  - Foreign Contaminants
    - ✓ Particles
    - ✓ Fibers
  - Cosmetic
  - Defective Caps and Closures
  - Fill Level
  - Product out of Specifications
  - …

Visual Defect Categorization

- Three criticality levels:
  - **Critical defects** – have direct impact on the product identity, purity and quality and that may have a risk for patient safety – *glass particle, crack, damaged closure*
  - **Major defects** – do not include a patient risk but may have a significant impact on the product use – *metal particle, fiber, missing flip off cap, underfill/overfill*
  - **Minor defects** – have no impact on patient safety neither on use of the product. They risk negatively impacting the product's image – *scratch outside, spot*
- AQL's
  - *"The median values for AQL's used are 0.065% for Critical, 0.65% for Major and 2.5% for Minor"*

Source: PDA Visual Inspection Survey 2014

Manual Visual Inspection MVI: Capability of Detection

Source: USP Chapter <1790> Visual Inspection of Injections

Understanding human performance is critical to establishing visual inspection criteria. The threshold for human vision is generally accepted to be 50 µm. Individual receptors in the eye have a resolution of 11 µm, but typical resolving power is reported as 85–100 µm *[4]*. The detection process is probabilistic: the likelihood of detection is a cumulative function of visible attributes such as particle size, shape, color, density, and reflectivity. Analysis of inspection results pooled from several studies *[5] [6]* shows that the probability of detection for a single 50-µm particle in a clear solution contained in a 10-mL vial utilizing diffuse illumination between 2000 and 3000 lux is only slightly greater than 0%. The detection probability increases to approximately 40% for a 100-µm particle, and typically exceeds 95% for particles that are 200 µm and larger. Thus, in a qualified visual inspection system, the vast majority of extraneous particles that might go undetected and be introduced into the pharmaceutical supply chain will be smaller than 200 µm. Changes to the container (e.g., increasing size and opacity), fill level, and particle characteristics beyond size (e.g., color, shape, and density) will all affect the probability of detection.

[4] Delly JG. Diffraction lines: the eyes have it. Microscope. 1989; 37:195-211

MVI: Probability of Detection

Historical Detection Data

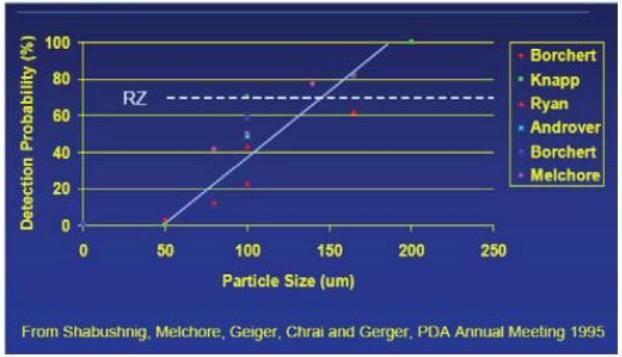

- Demonstrated across multiple studies detection capability directly relates to size and negligible detection at 50 microns
- Demonstrated reliable detection (> 70%) begins at ~ 150 microns

Critical step forward in visual inspection process characterization

Connecting People, Science and Regulation

5

Understanding the Data

It is important to note that this 1995 study characterized particulate detection under highly idealized conditions:

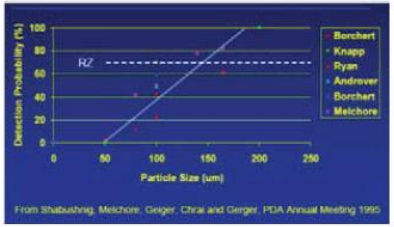

- Clear liquid
- Vials
- Relatively large fill volumes
- Primarily Polystyrene particles – neutrally buoyant in water and therefore highly visible

Actual product inspection may have significantly different associated detection and poses a risk that the delta between published and actual may be misunderstood.

Connecting People, Science and Regulation

6

Source: Shabushnig, Melchore, Geiger, Chrai and Gerger, PDA Annual Meeting 1995

Convel' Visual Inspection Product Portfolio

Manual Visual Inspection – MVI	Semi-Automated Visual Inspection – SAVI	Automated Visual Inspection – AVI
TB	RC	C2 C2D BM C3

Manual Visual Inspection

MVI

- The inspection process takes place in a bench top system equipped with:
  - ✓ White and black backgrounds
  - ✓ Two High Power Long Life Led illumination systems: back light and bottom light
  - ✓ Adjustable speed rotating spindle motor
  - ✓ 2X magnifying lens installed on to a slide to adjust the inspection distance
  - ✓ Adjustable top tailstock to keep the container in place during inspection

Convel Offer – Manual Visual Inspection (Cont'd)

- TB Equipment:
  - ✓ Overcomes the limitations implied by viewing stations with black and white panels
  - ✓ Limit the subjectivity and increase accuracy in the inspection process
  - ✓ More flexible for new products and packages
  - ✓ Quicker response to new defect types
  - ✓ More cost effective for small batches / many different product types
  - ✓ Reference standard for all compendia
  - ✓ Low initial cost

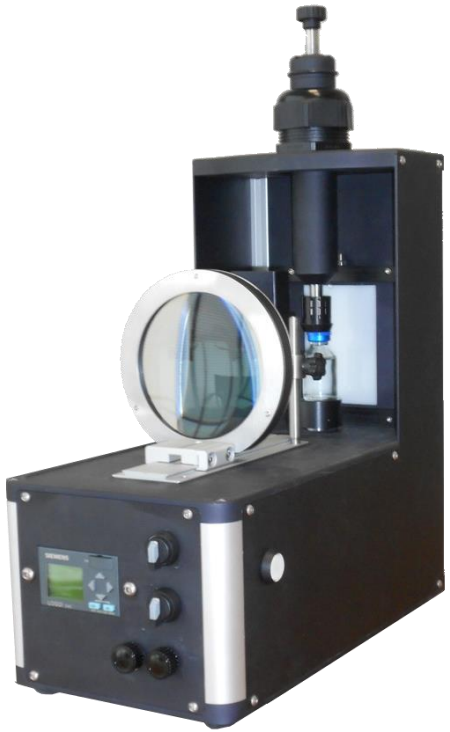

Convel Offer – Manual Visual Inspection (Cont'd)

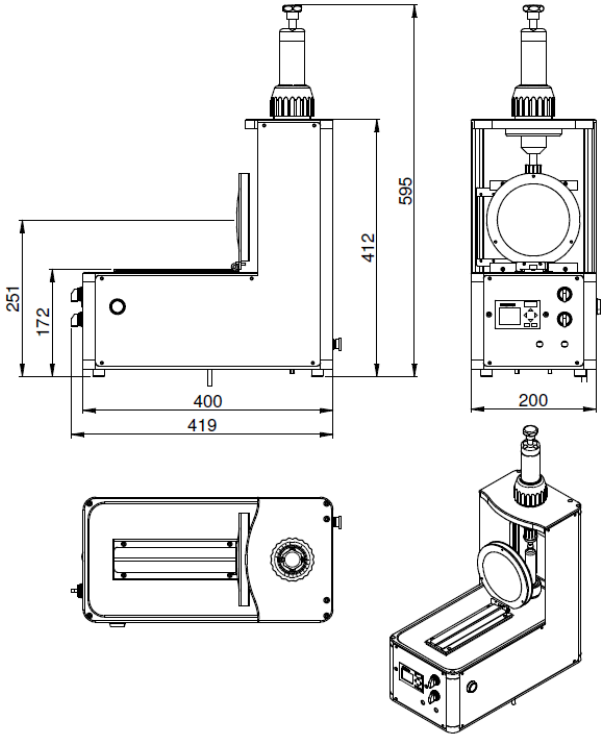

Dimensions (LxWxH)

420 x 200 x 600

Weight

12 Kg

Electrical / Power

230V ± 10% 50/60Hz 1 Ph 250W

Containers dimensions

1 to 250 ml

Containers types

Ampoules, cartridges and vials

Container sizes

Ø8 ÷ Ø52 mm

Maximum containers height

130 mm

Semi-Automated Visual Inspection

- SAVI
  - SAVI is a MVI aided by an automatic handling system
  - Visual inspection of:
    - ✓ Vials, ampoules, cartridges, prefilled syringes
    - ✓ Liquid, powdered, lyophilized products
    - ✓ Empty containers
    - ✓ Foreign matters, cosmetic defects, integrity defects, fill level and other defects
  - Higher rates than MVI and with less operator fatigue

Convel offer – Semi-Automated Visual Inspection

RC Equipment

- Semi-automated solution including an automated handling system for the transportation of containers to a position in which a human inspector performs the visual inspection process.
- Designed to be used for the inspection of a wide variety of containers such as ampoules, vials, cartridges, bottles, prefilled syringes, both empty and filled with liquid, lyophilized or powder products

Convel offer – Semi-Automated Visual Inspection (Cont'd)

- RC Equipment
  - The use of different glare-free lighting systems and mirrors allows to detect visual defects such as:
    - ✓ foreign contaminants in the product, cosmetic defects as cracks, black spots, burnings, damages located in the container body, bottom, shoulder and top.
    - ✓ Defects affecting container closure integrity
    - ✓ (Prefilled syringes) defects onto the barrel and onto syringe surface, needle shields and luer locks, plunger and other areas of interest
    - ✓ Production Capacity: 6.000 containers/hour
  - Magnifying lens 2x
  - Illumination systems (LEDs): bottom light, backlight and top/front light

RC Equipment: Multiple Configurations Available (1)

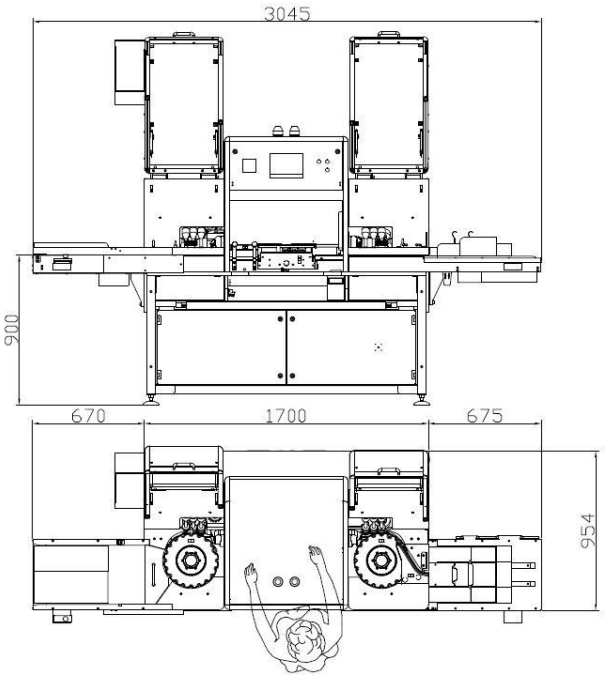

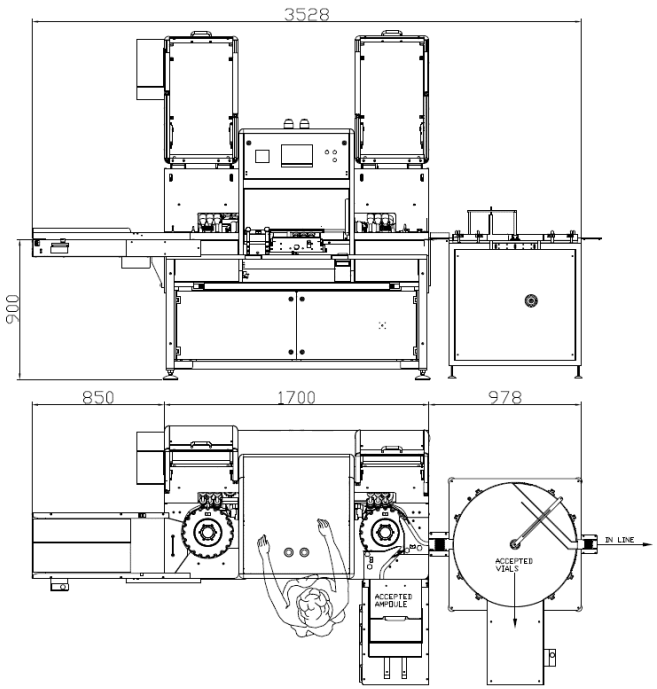

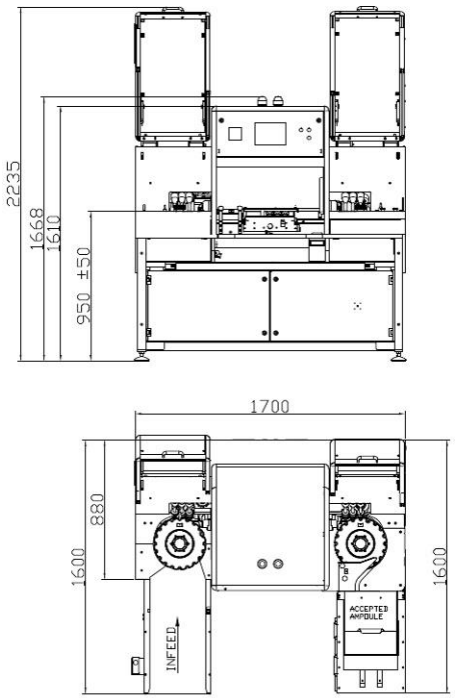

RC Equipment: Multiple Configurations Available (2)

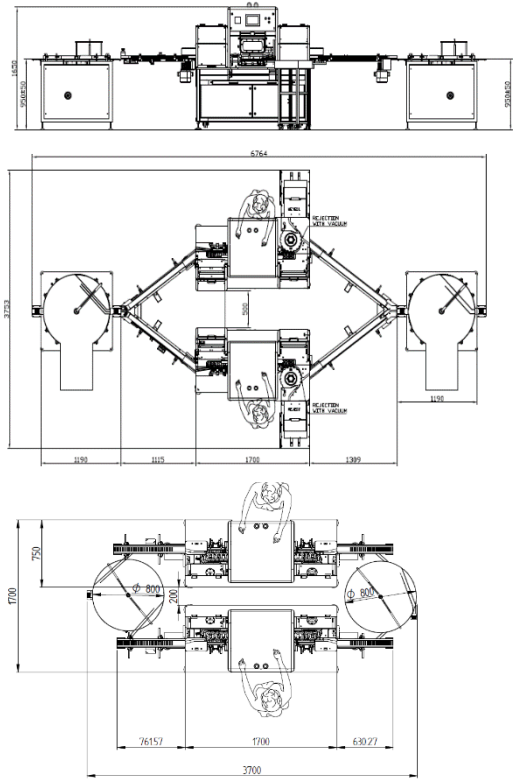

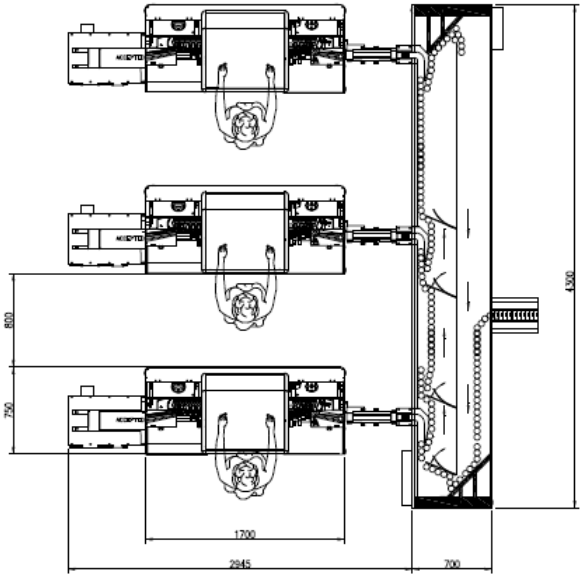

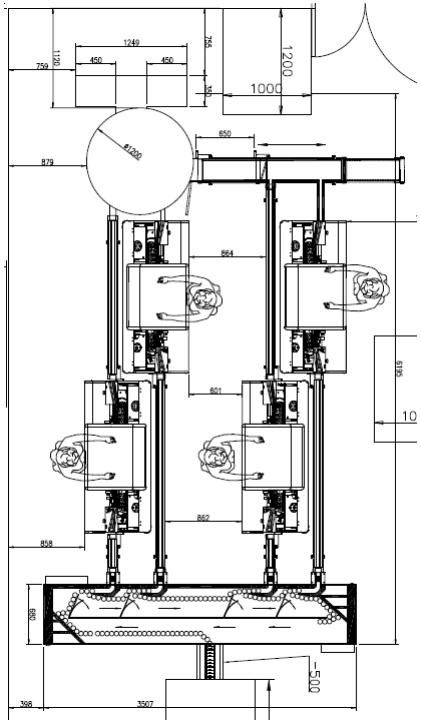

Automated Visual Inspection

AVI

- It combines automated handling of the containers with electronic sensing of product appearance
- Containers not meeting pre-set acceptance criteria are automatically rejected by the machine
- Inspection is performed for particles and fill level, container and closure system and all visual attributes of the containers, such as cosmetic and functional
- Containers are spun to set particles in motion and make them easier to detect
- Multiple cameras are used to image various regions on the container
- Each camera is coupled with unique lighting to highlight specific defects in the ROI
- Light-field and dark-field lighting techniques offer the same benefits as white and black backgrounds, offering contrast for a full range of light- and dark-colored defects
- A defect found by any camera is tracked through the machine to allow accurate ejection by the reject system

Automated Visual Inspection (Cont'd)

- Focus on Foreign contaminants detection:
  - Prior to the inspection, the containers are rotated at high speed to whirl up any foreign contaminants
  - As soon as the products appear in front of the camera, the rotation is stopped
  - The liquid inside the containers continues to rotate and a sequence of images is taken
  - The images are compared to each other in the image processor
  - Objects which have shifted their location between the sequence of images are detected as particles
  - Heavy non moving particles can also be detected with specific configuration
  - Depending on products and typical defects, different rotation speeds or light techniques can be used

Convel offer – Automated Visual Inspection

- Glass applications: vial, ampoules, cartridges

C2	C2D	C3
Speed: 12.000 units per hour	Speed: 24.000 units per hour	Speed: 12.000 units per hour
Container diameter: 8-36 mm	Container diameter: 8-36 mm	Container diameter: 8-78 mm
Liquid products	Liquid products	Liquid, suspension and lyo products

100% Equipment – C2

Model «C2»

- Up to 12000 pieces per hour
- Ampoules, vials, cartridges
- Container Diameter range: 8,65-39 mm
- Container Height range: 35-100 mm
- Liquid products
- 3 Stations for Particle Inspection, fill level check included

Features and tools:

1. *Reduced number of recipe parameters*
2. *Automatic Knapp test system*
3. *Double illumination system for particles detection – Tyndall effect system*
4. *MA Connection up/downstream module available as an option*

100% Equipment – C2 (cont'd)

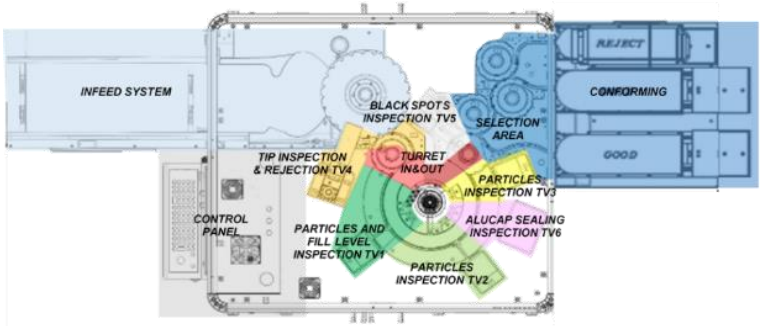

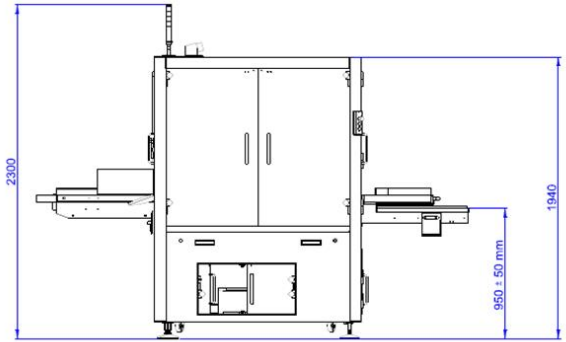

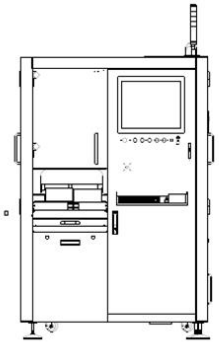

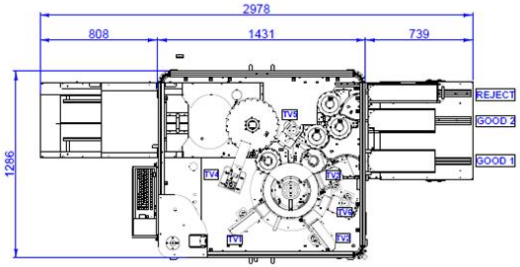

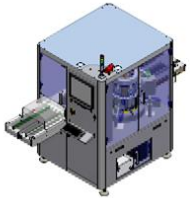

100% Equipment – C2D

Model «C2D»

- Up to 24000 pieces per hour
- Ampoules, vials, cartridges
- Container Diameter range: 8,65-39 mm
- Container Height range: 35-100 mm
- Liquid products
- 3+3=6 Stations for Particle Inspection, fill level check included

Features and tools:

1. *Reduced number of recipe parameters*
2. *Automatic Knapp test system*
3. *Double illumination system for particles detection – Tyndall effect system*
4. *MA Connection up/downstream module available as an option*

100% Equipment – C2D (cont'd)

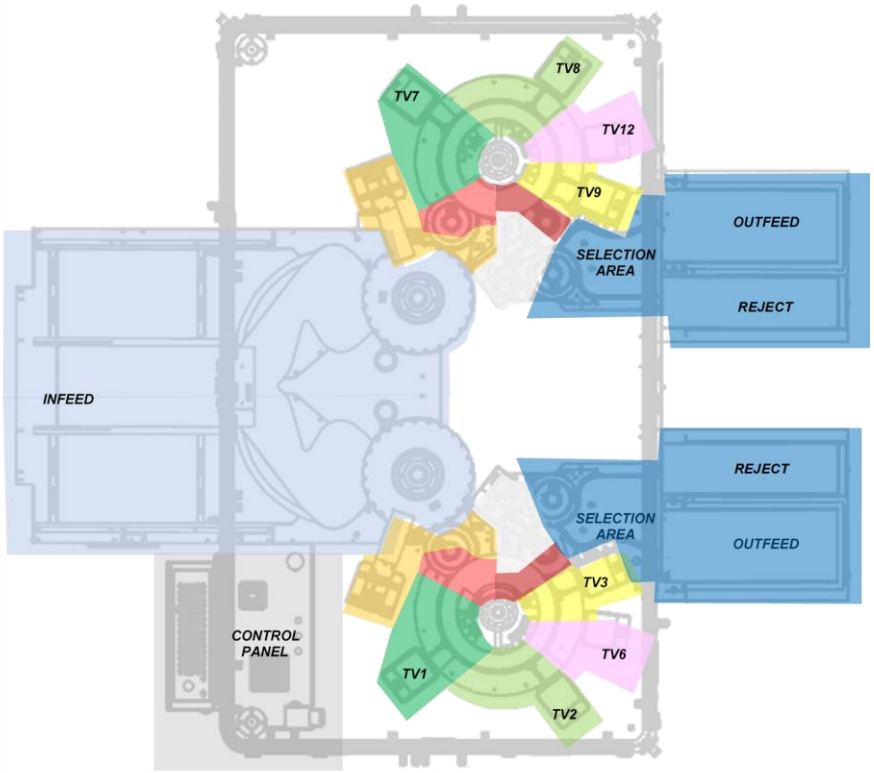

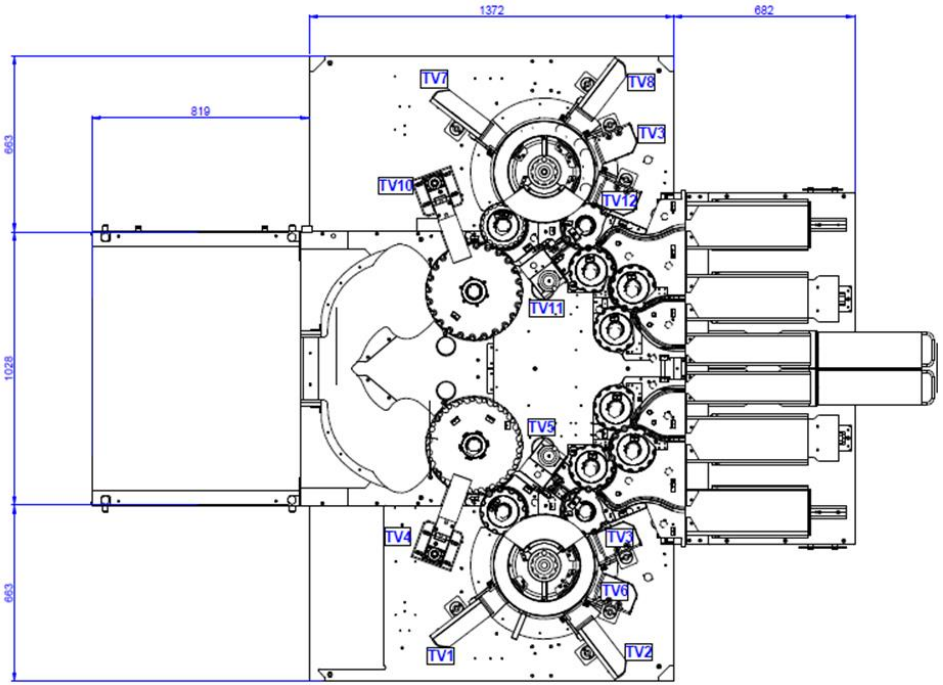

100% Equipment – C3

Model «C3»

- Up to 12000 pieces per hour
- Ampoules, vials, cartridges, bottles
- Container Diameter range: 8,65-78 mm
- Container Height range: 35-177 mm
- Liquid, Lyo and Suspension products
- 4 Stations for Particle Inspection, fill level check included

Features and tools – in addition to C2 / C2D:

1. *Up to 2 stations dedicated to detection of heavy particles*
2. *Dedicated HW and SW configuration for lyo products inspection*
3. *Upgrade possible to Headspace Gas Analysis – up to 2 HGA units – Oxygen, Moisture, Vacuum level*
4. *Up to 4 exits (configurable for reject causes and conformities)*

100% Equipment – C3 (cont'd)

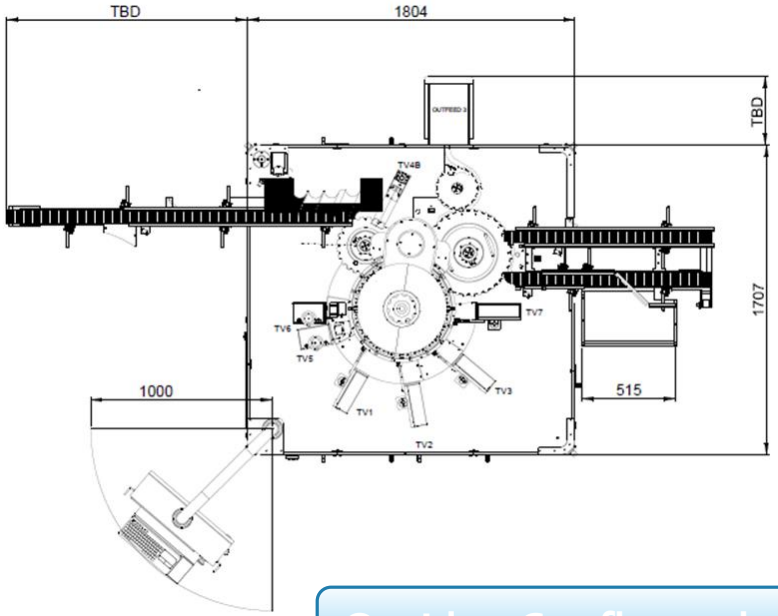

On-Line Configuration

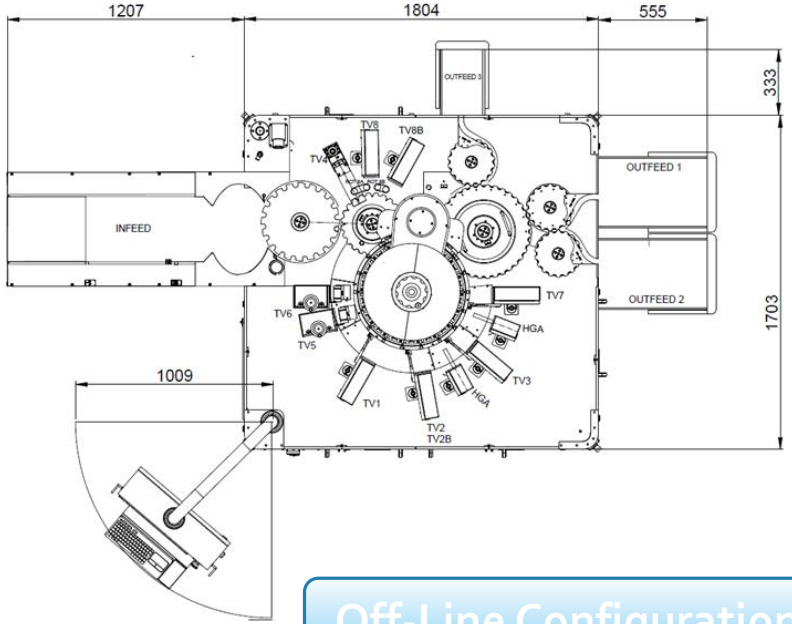

Off-Line Configuration

Inspection Stations: Liquids and Suspensions

Camera ID	Liquid products		Suspension products	
	Glass Ampoules	Vials / Cartridges	Glass Ampoules	Vials / Cartridges
TV1	Particles / fill level	Particles / fill level	Particles / fill level	Particles / fill level
TV2	Particles / fill level	Particles / fill level	Particles / fill level	Particles / fill level
TV3	Particles / fill level	Particles / fill level	Particles / fill level	Particles / fill level
TV4	Tip	-	Tip	-
TV4B	-	Cap color	-	Cap color
TV5	Black spots, OPC, Ring	Seal	Black spots, OPC, Ring	Seal
TV6	Cosmetic	Cosmetic	Cosmetic	Cosmetic
TV7	Particles / fill level	Particles / fill level	-	-
TV8	Heavy particles	Heavy particles	Heavy particles	Heavy particles
TV8B	-	-	Heavy particles	Heavy particles

Inspection Stations: Lyo Products

Camera ID	Lyophilized products	
	Glass Ampoules	Vials
TV1	Lyo cake sidewall	Lyo cake sidewall
TV2	-	-
TV2B	Lyo cake top side	Lyo cake top side
TV4	Tip	-
TV4B	-	Cap color
TV5	Black spots, OPC, Ring	Seal (ferrule, flip-off, stopper presence)
TV6	Cosmetic	Cosmetic
TV7	-	-
TV8	Lyo cake bottom side	Lyo cake bottom side
TV8B	-	-

Liquid Products: Particles and Fill Level Detection

C2 / C2D

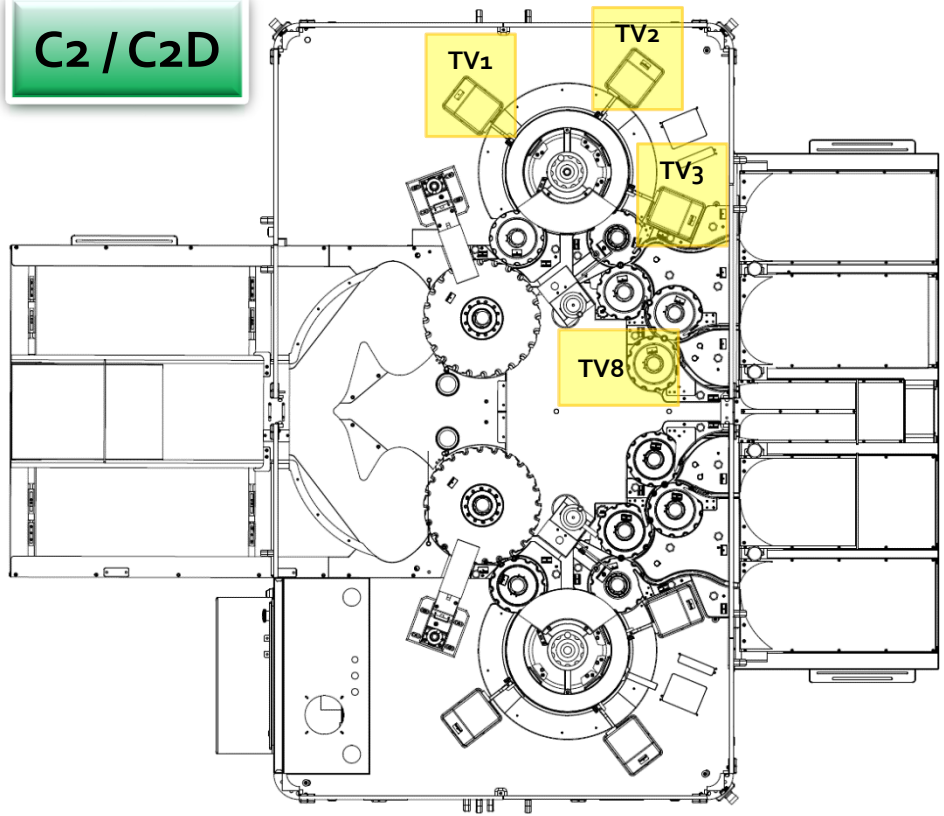

C3

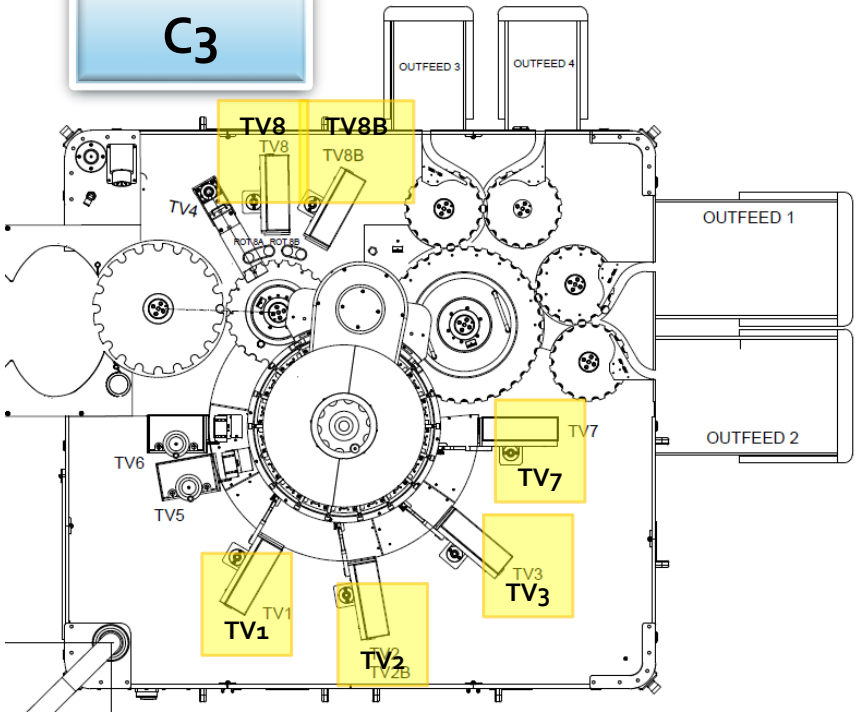

Lyo Products: Particles Detection

C3

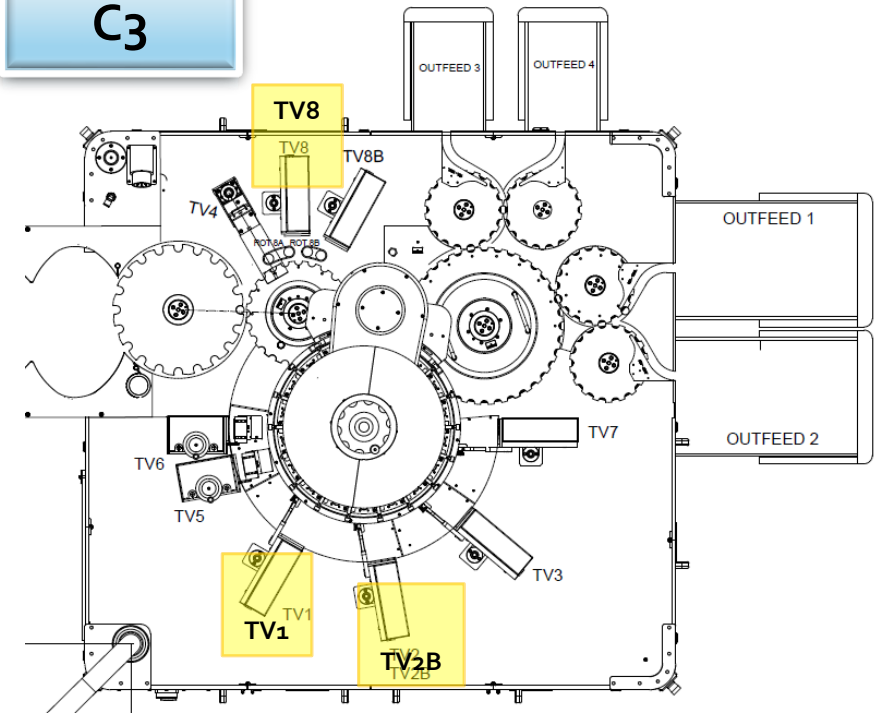

Liquid Products into Glass Ampoules: Tip Shape

C2 / C2D

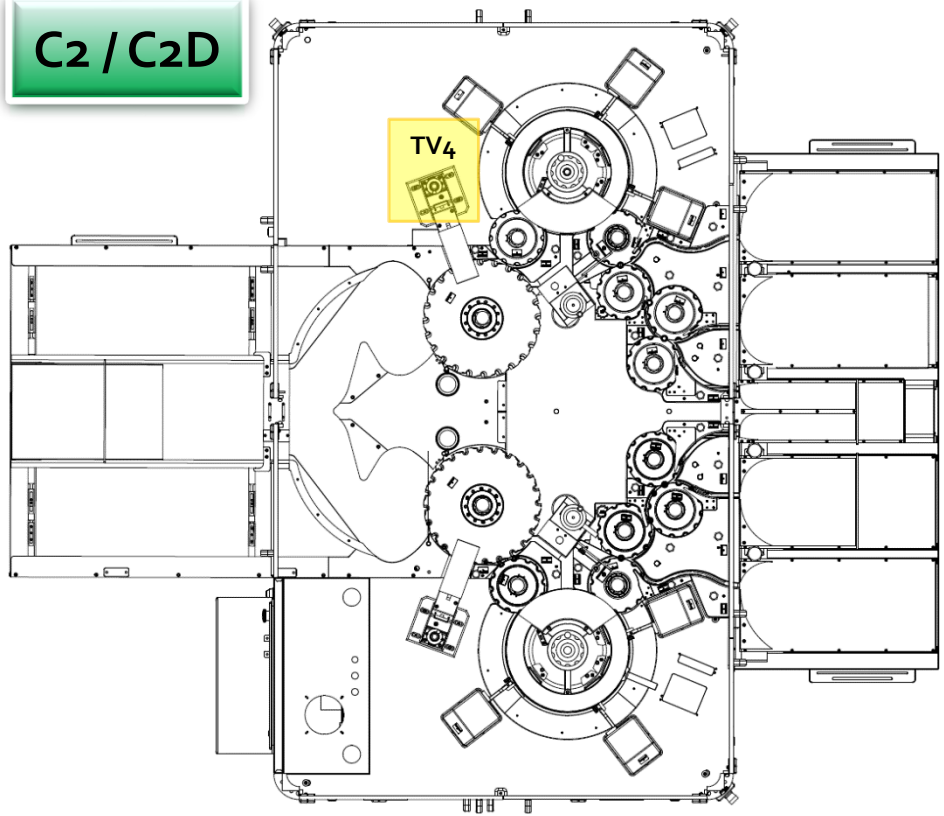

C3

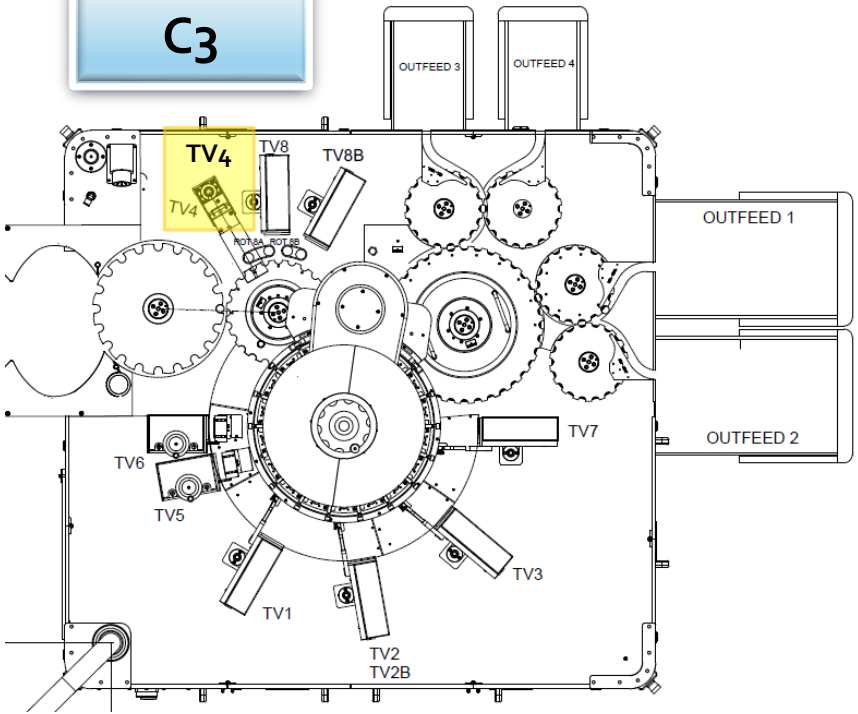

All Products into Vials: Cap Color

C2 / C2D

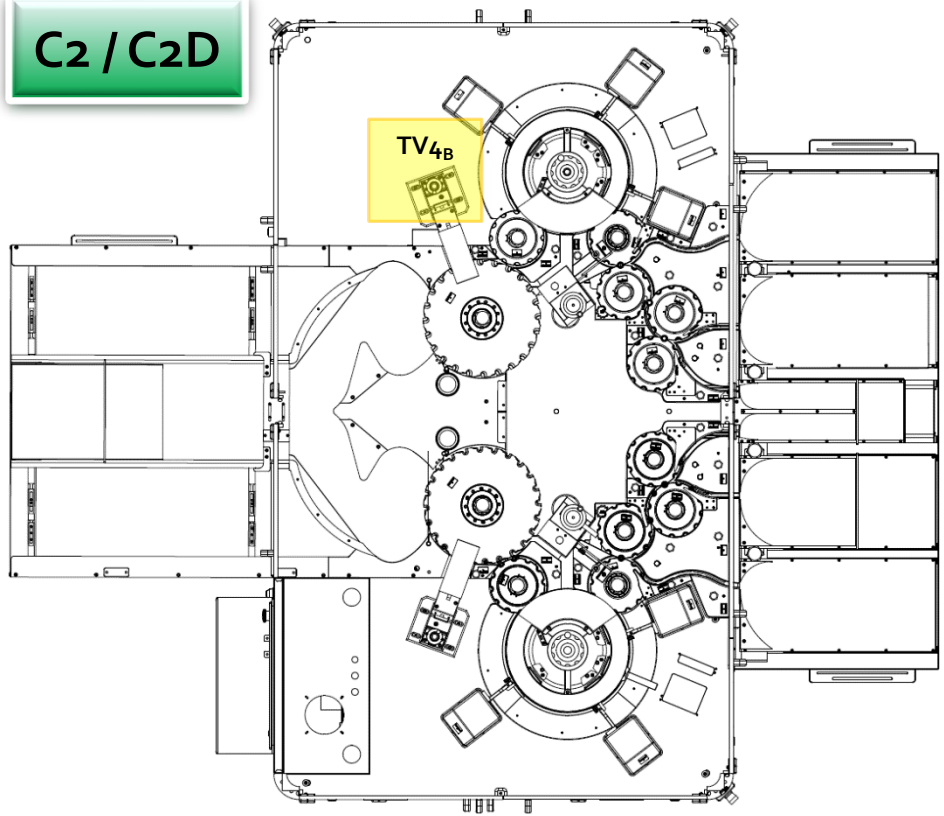

C3

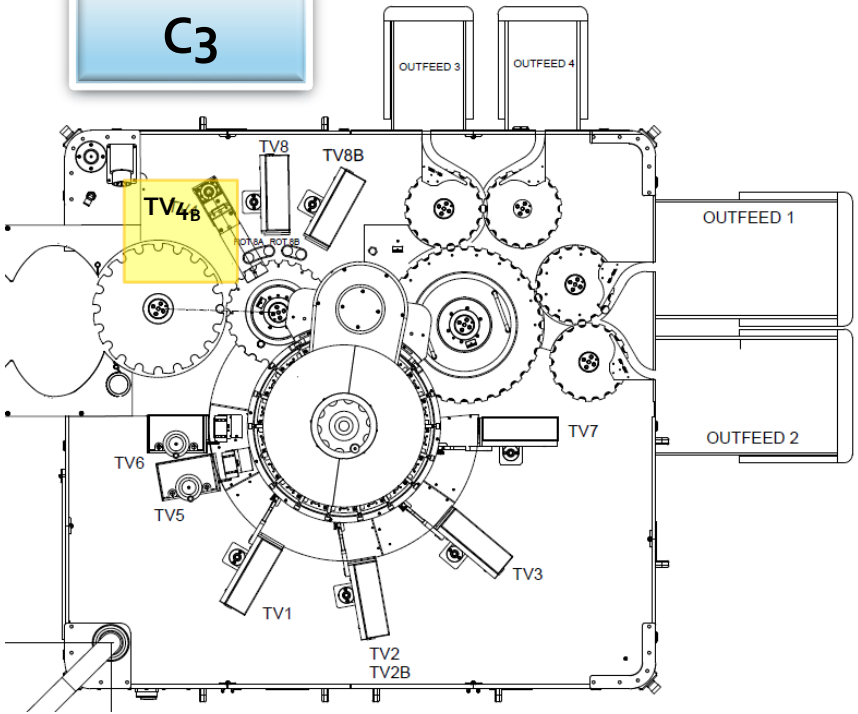

All Products into Glass Ampoules: Black Spots / Rings

C2 / C2D

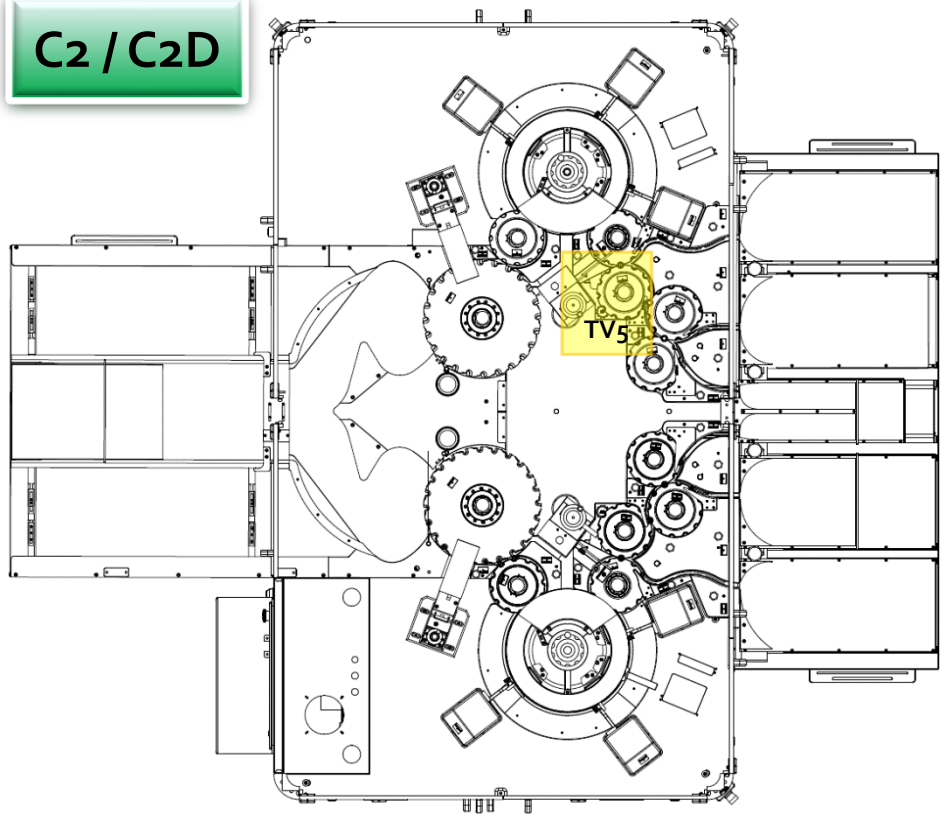

C3

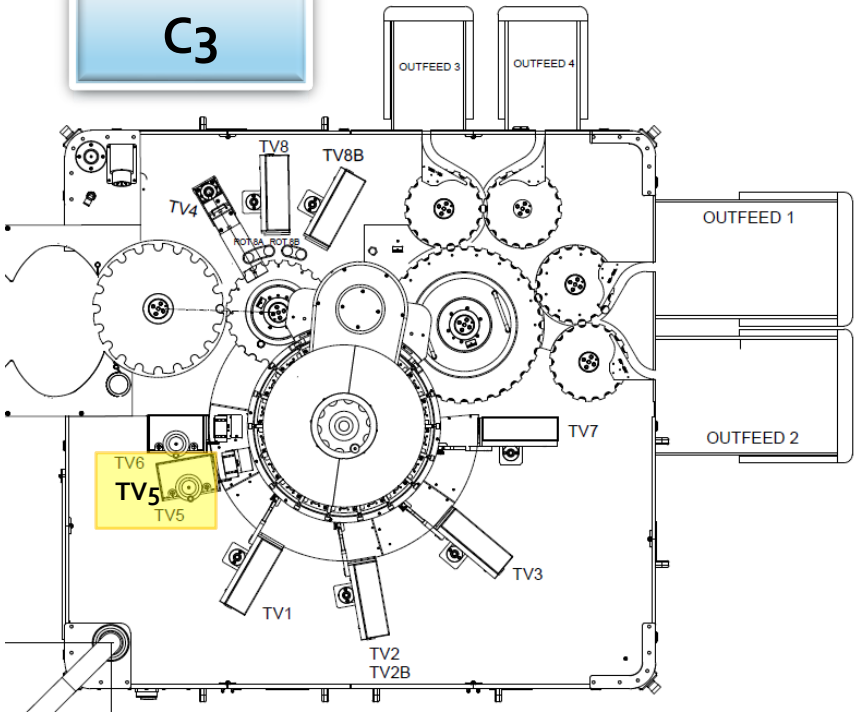

All Products into Vials: Seal (ferrule, flip-off, stopper presence)

C2 / C2D

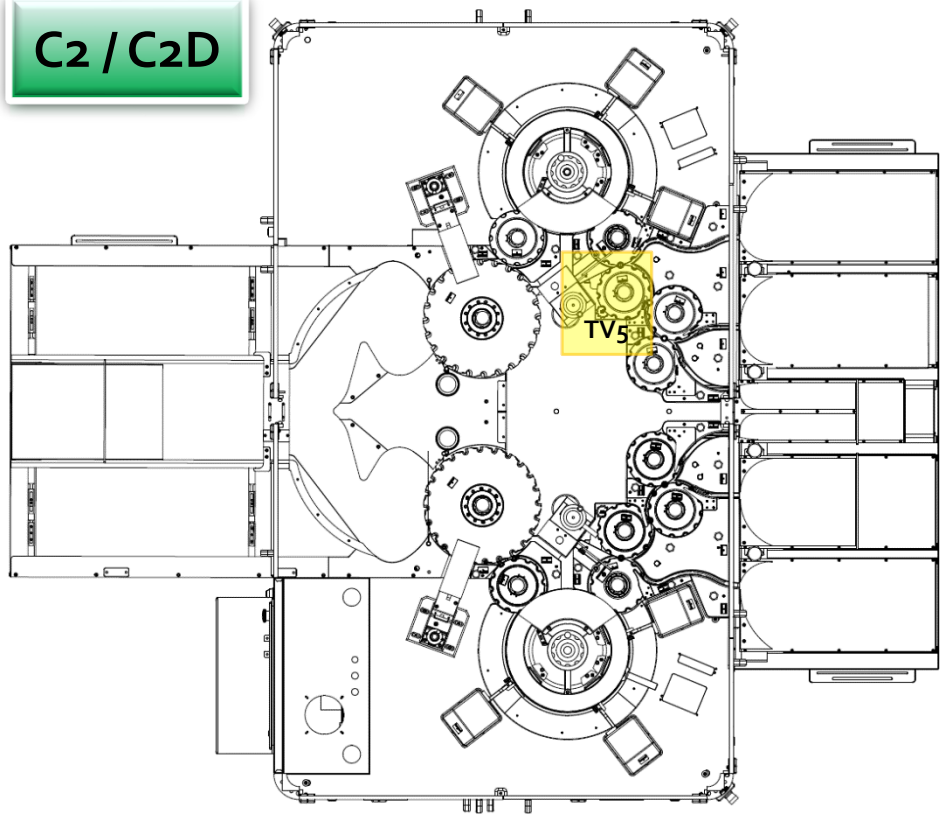

C3

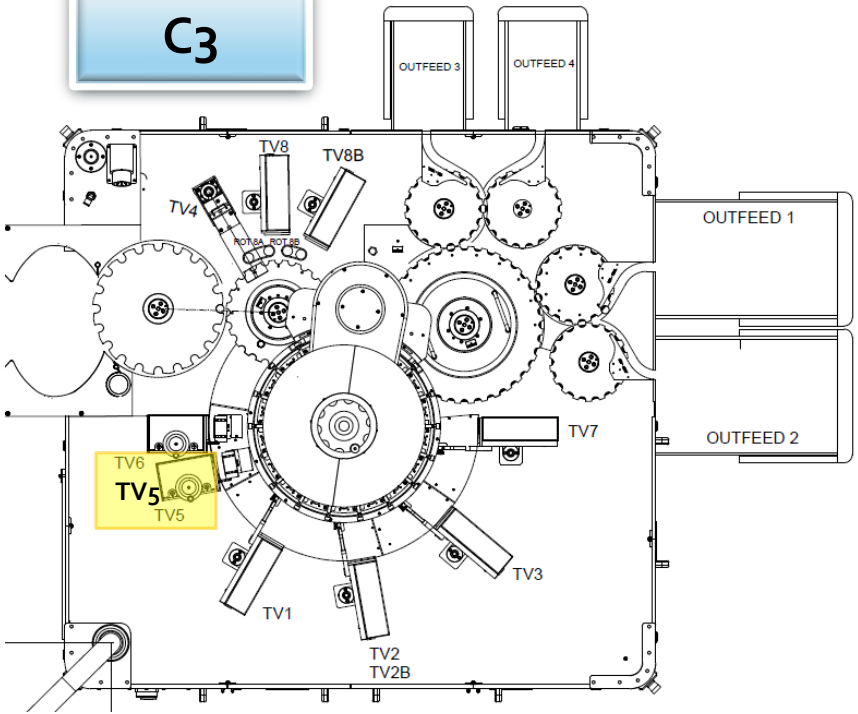

All Products into Vials: Crack, Scratches

C2 / C2D

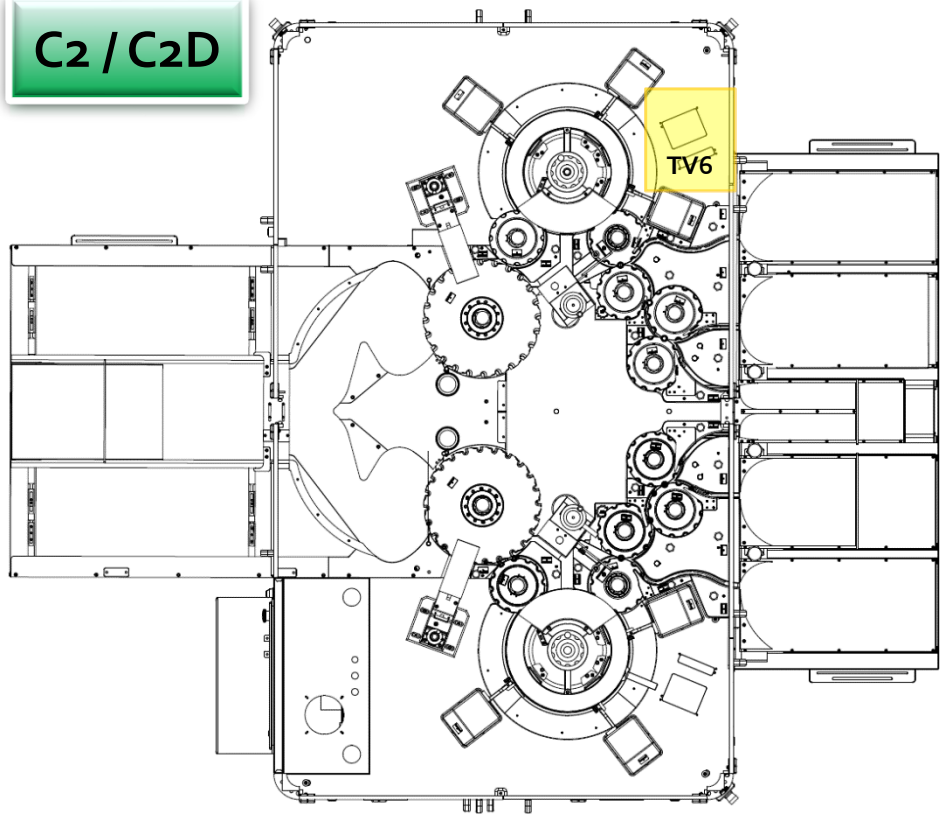

C3

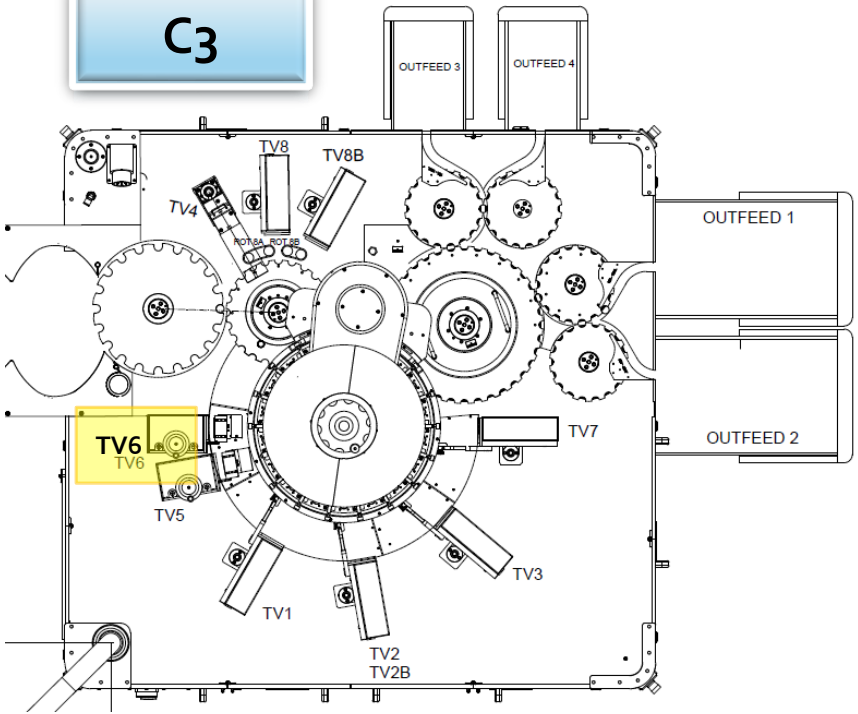

Liquid Products: Particles + Fill Level (TV1-TV2-TV3-TV7)

- B&W camera
- Multi frame analysis
- C2 / C2D equipment: 24 spindles
- C3 equipment: 36 spindles

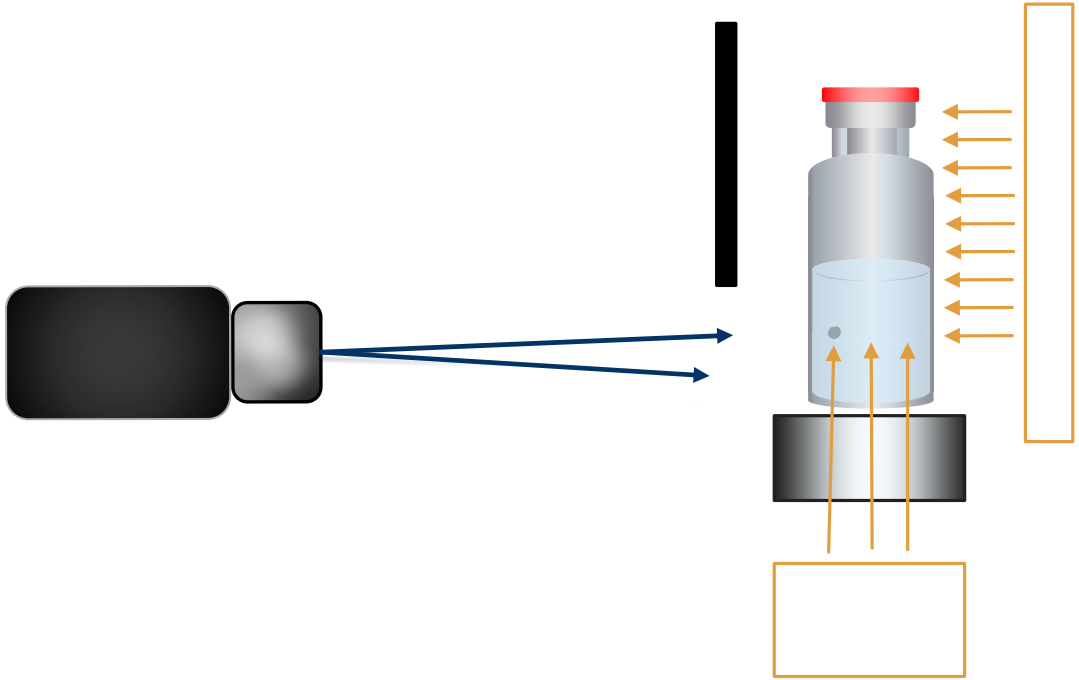

Liquid Products: Particles + Fill Level (TV1-TV2-TV3-TV7)

- 3 different illumination techniques
- Multi frame analysis and light combination options

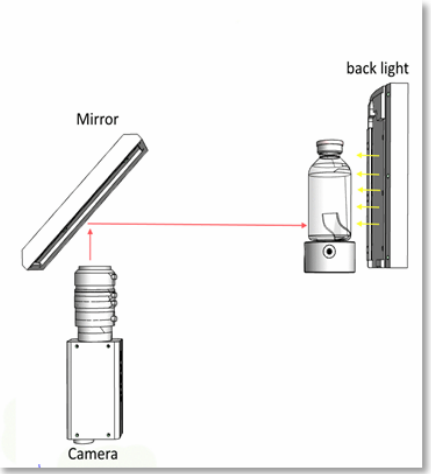

1) Back Light

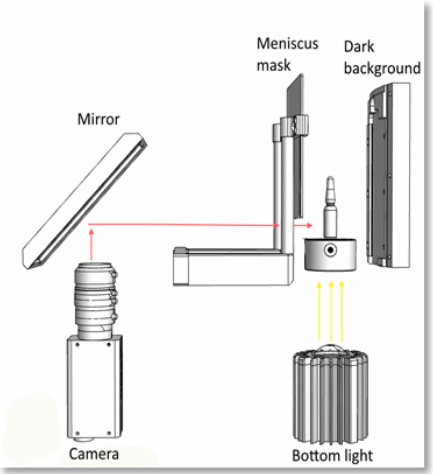

2) Bottom Light

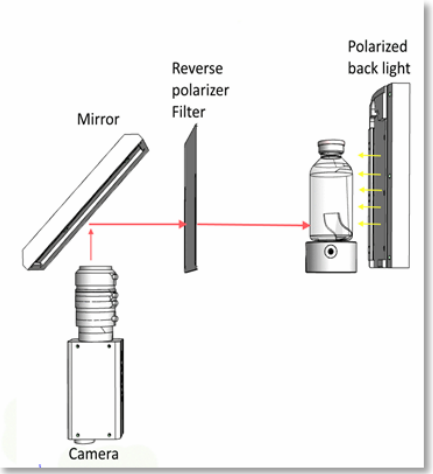

3) Polarized Light

Liquid Products: Particles + Fill Level (TV1-TV2-TV3-TV7)

- Backlight Inspection

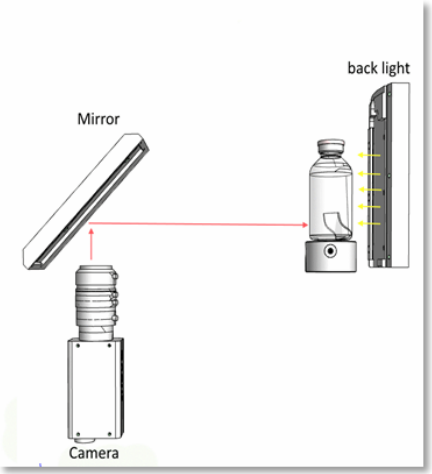

1) Back Light

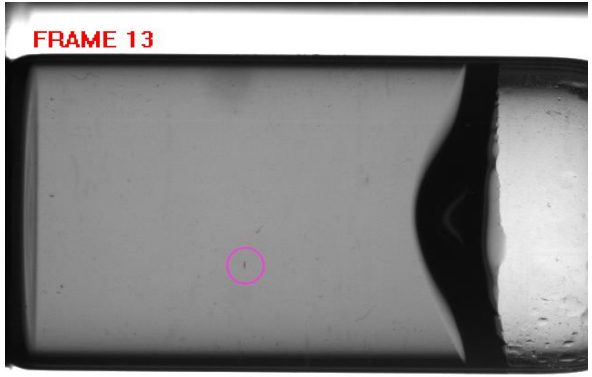

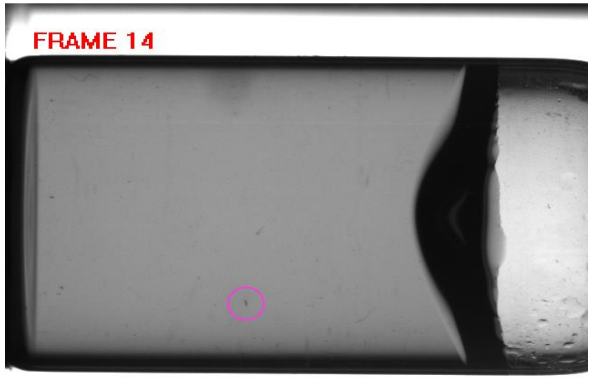

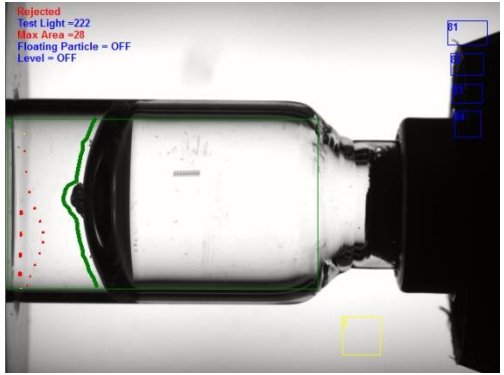

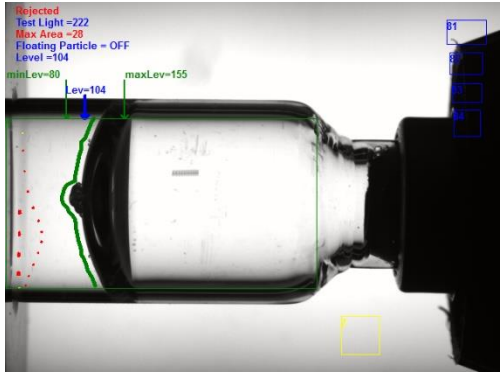

Liquid Products: Particles + Fill Level (TV1-TV2-TV3-TV7)

- Bottom light inspection and meniscus mask effect

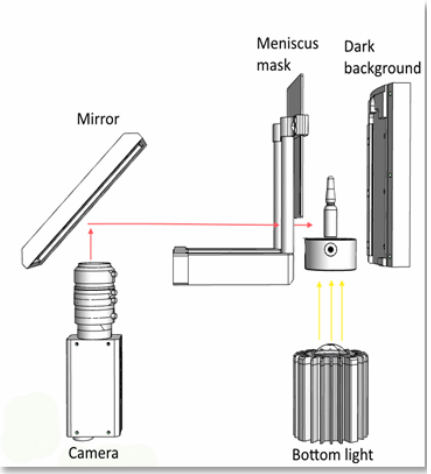

2) Bottom Light

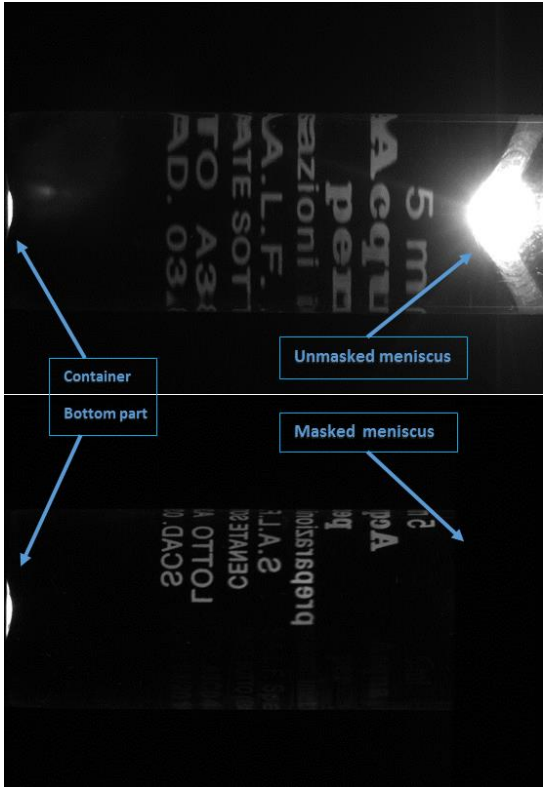

Liquid Products: Particles + Fill Level (TV1-TV2-TV3-TV7)

- Polarized light
- The effect of two reverse linear polarizer filter
- The double arrow specifies the polarization direction of the filter

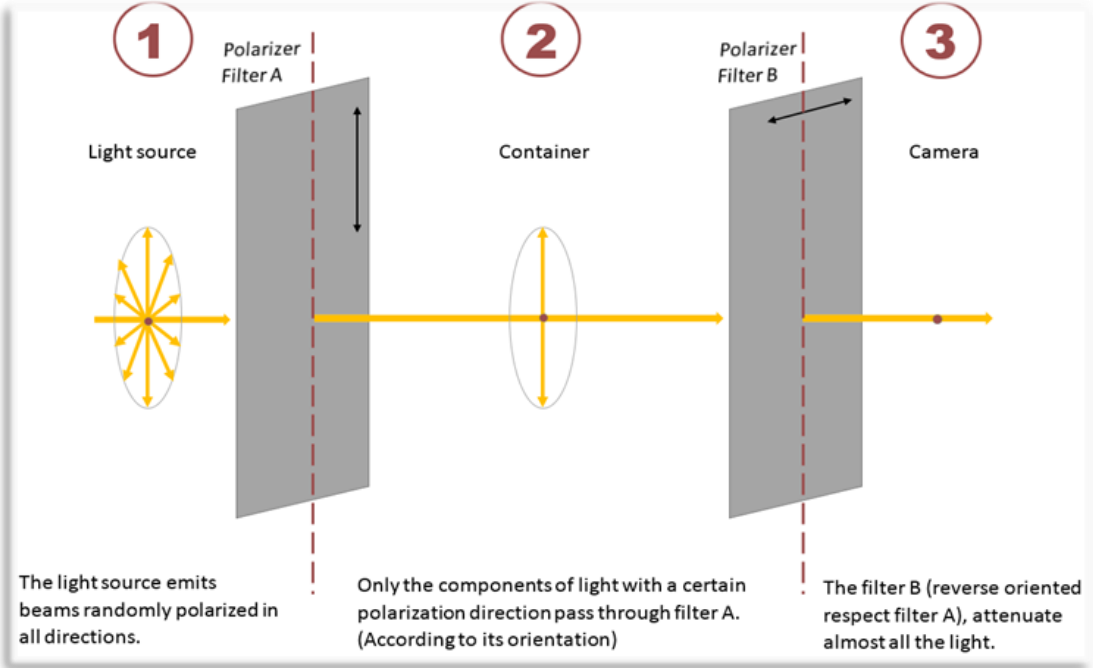

Liquid Products: Particles + Fill Level (TV1-TV2-TV3-TV7)

- Polarized light
- A highly concentrated light beam with adjustable intensity causes particles to reflect light (Tyndall Effect)
- Detection of foreign matters is facilitated

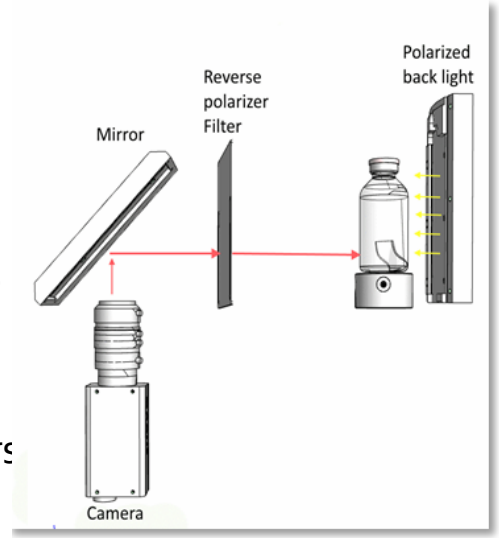

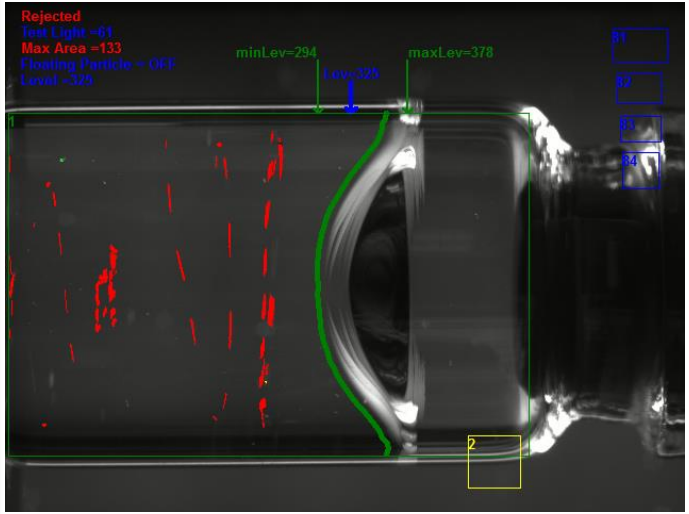

3) Polarized Light

All products into Vials: Cap Color (TV4B)

- Color camera
- Single frame analysis
- Camera and illumination system height adjustable

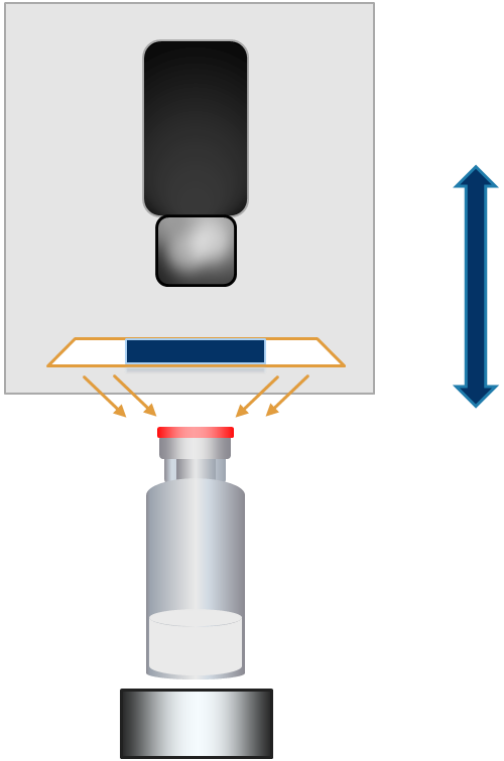

All products into Glass Ampoules: Tip Shape (TV4)

- Color camera
- Single frame analysis
- Camera and illumination system height adjustable

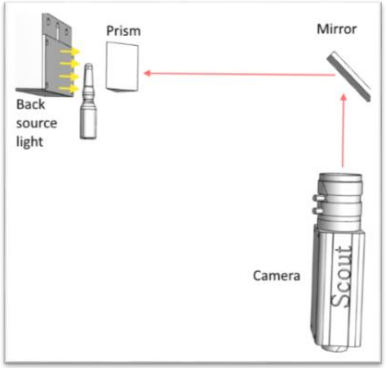

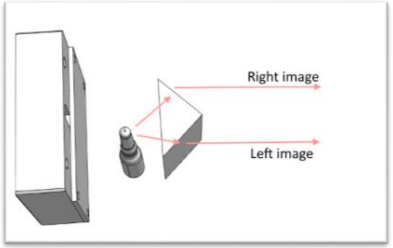

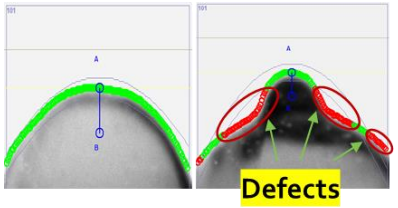

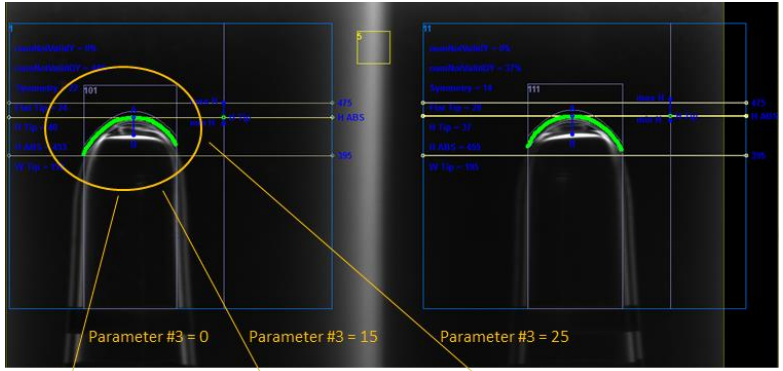

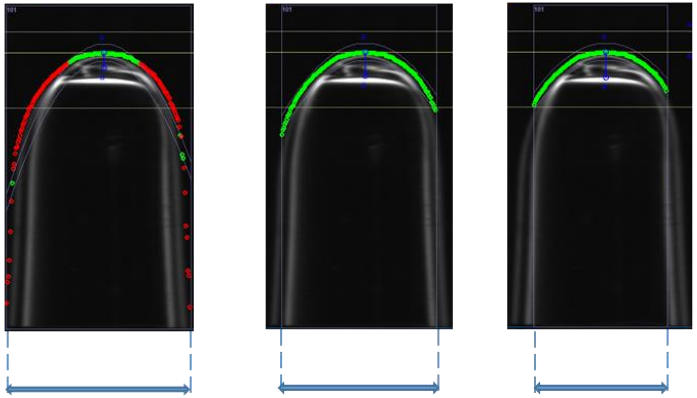

All products into Glass Ampoules: Tip Shape (TV4)

- Two configurations
  1. Dark Background
  2. White Background
- Same working principle and parameters in both cases

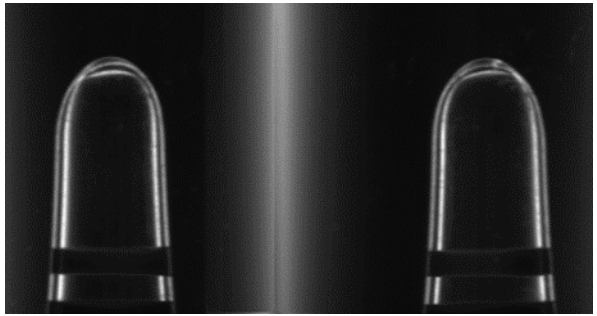

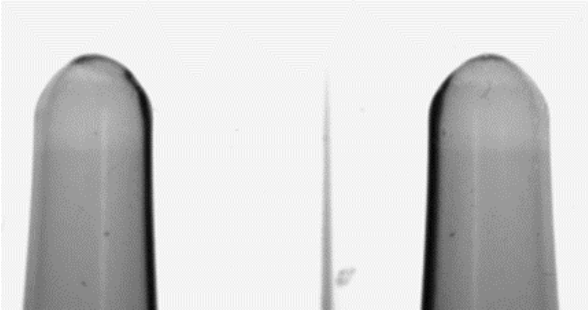

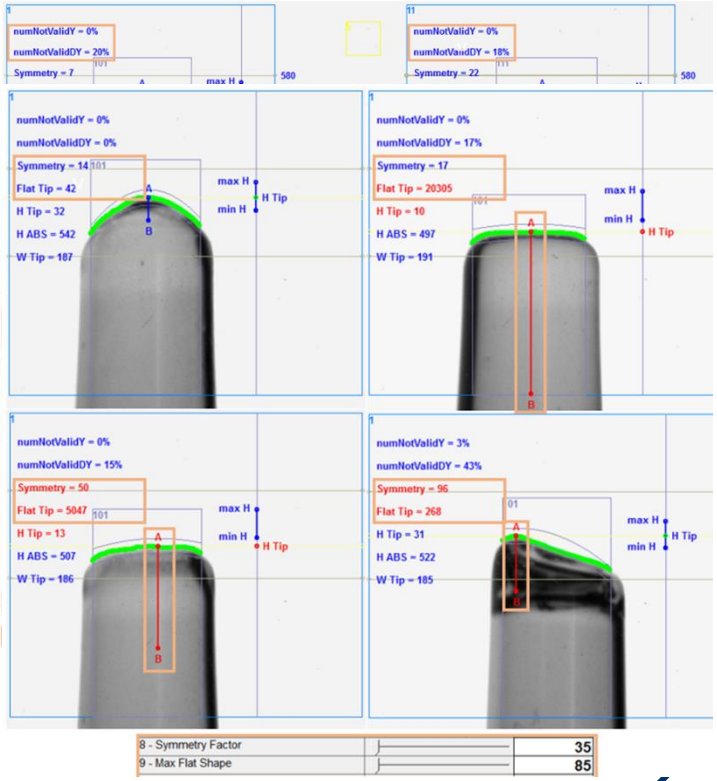

All products into Vials: Seal (TV5)

- B&W camera
- Multi frame analysis
- Rotation during inspection
- Camera height adjustable

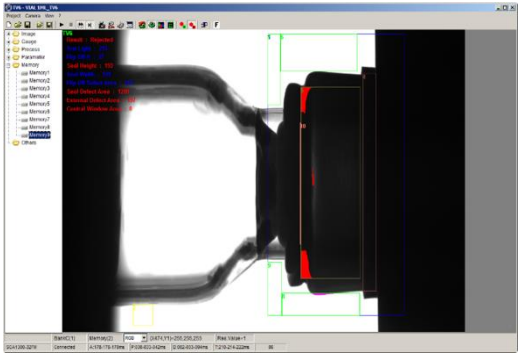

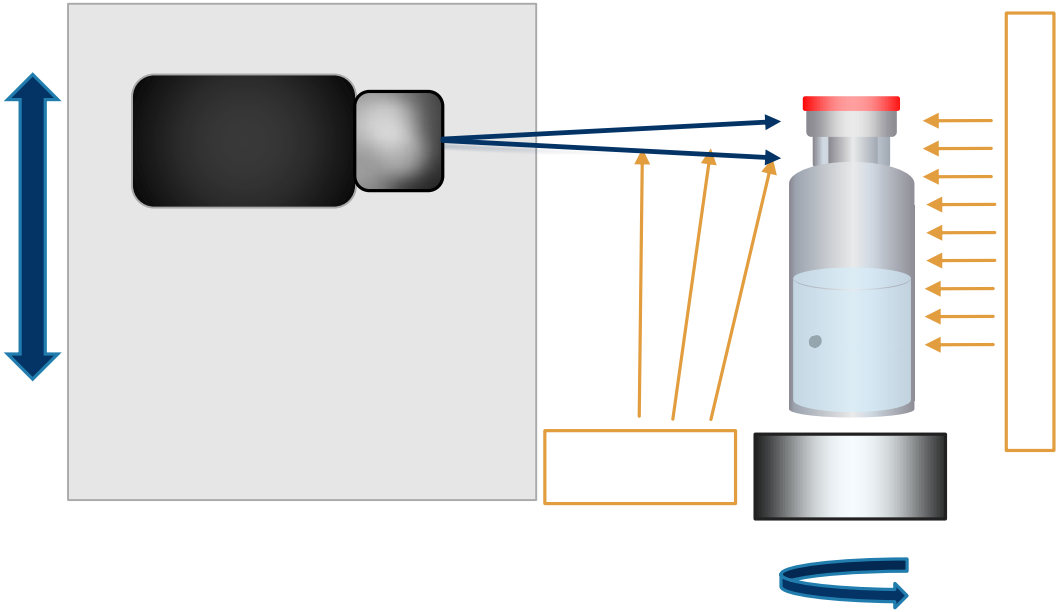

Lyo Products: Cake Sidewall (TV1)

- B&W camera
- Multi frame analysis
- Rotation during inspection
- Camera height fixed

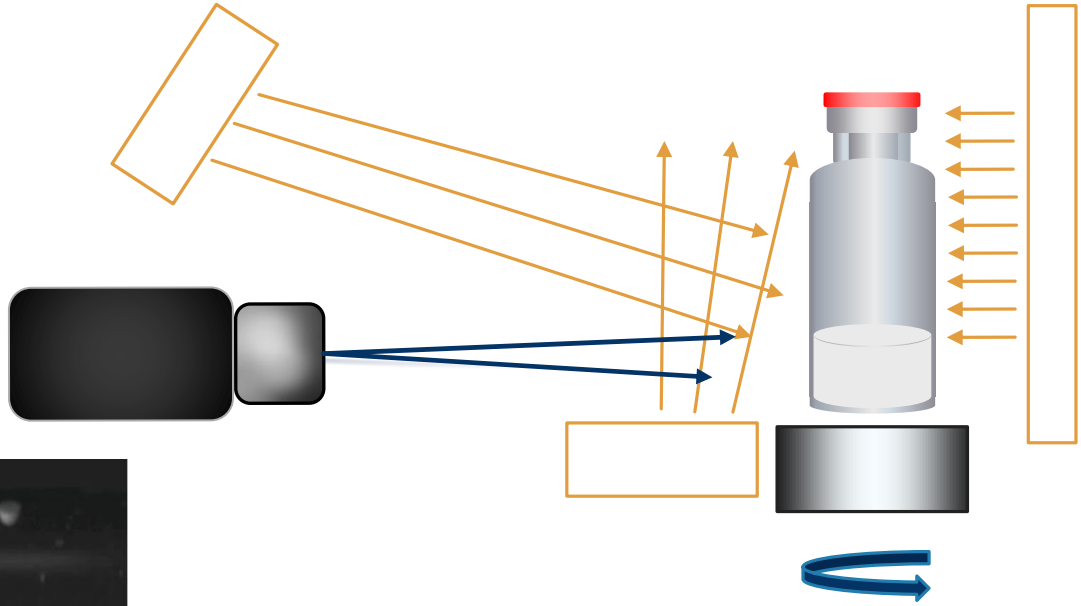

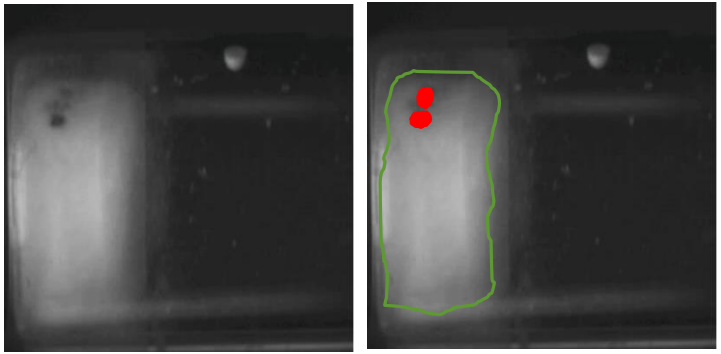

Lyo Products: Cake Top Side (TV2B)

- B&W camera
- Multi frame analysis
- Rotation during inspection
- Camera height fixed

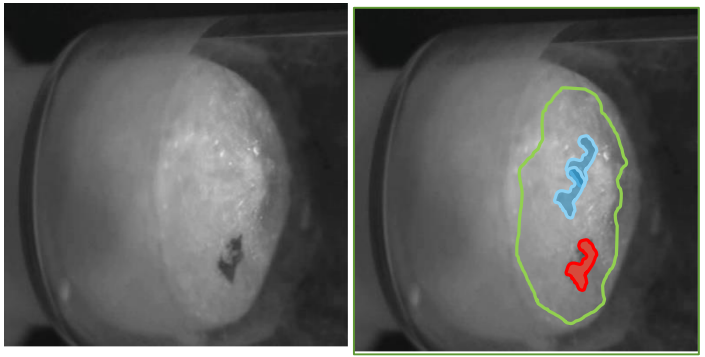

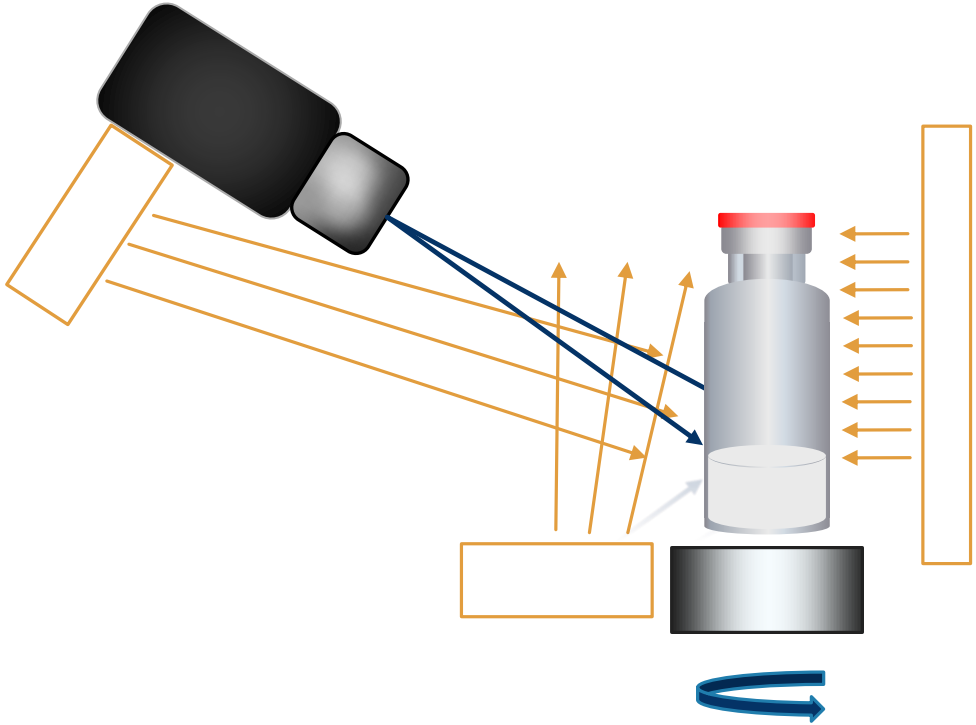

Lyo Products: Cake Bottom Side (TV8)

- B&W bottom camera
- Single frame analysis
- Fixed Camera position
- Bottom circular light
- Top light (if required)

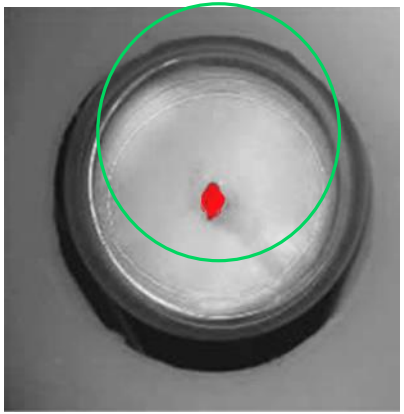

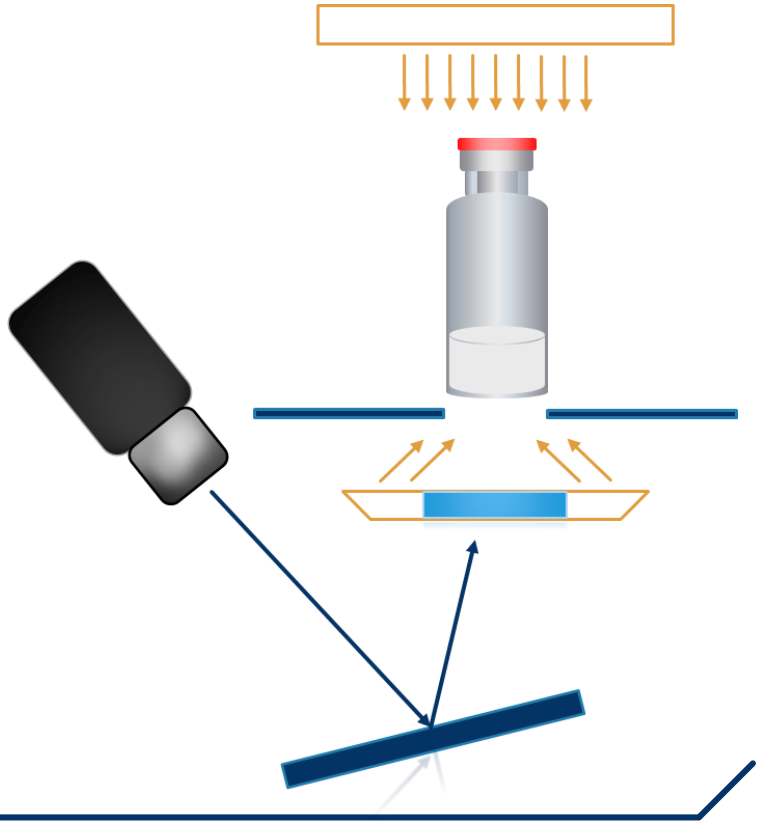

Frame Analysis

- Acquisition of one or more images
- Inspection of the single frame in some specific areas
- Each acquired value is compared to a preset threshold
- Rejection in case threshold value is exceeded

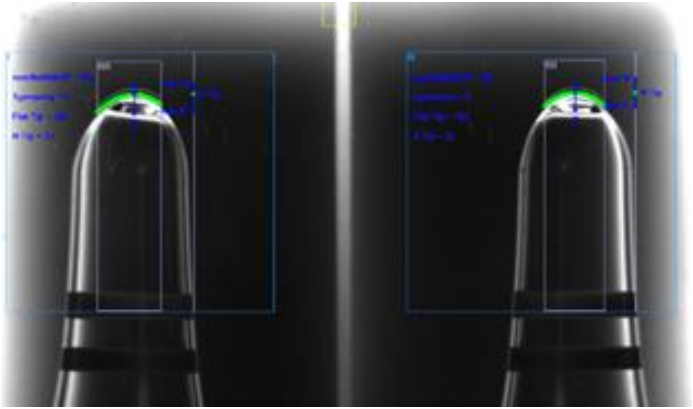

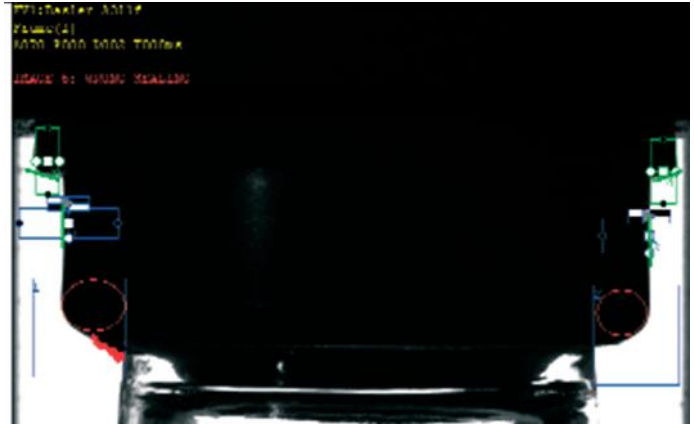

Image Subtraction

- Acquisition of a sequence of images on the same container
- Comparison between images
- Fixed object (markings/dust - green) are distinguished from moving objects (particles - red)
- Fixed objects are masked by the software system and not analysed (green parts); moving objects are subject to analysis;
- Threshold is set on the area (group of pixels)

Convel offer – Automated Visual Inspection (Cont'd)

- Semi-rigid IV Bags:

1. Visual Inspection:

✓ Standard detectable visual defects are foreign contaminants such as reflecting and non-reflecting particles, plus cosmetic and shape defects

2. Leak Detection:

✓ Based on the High Voltage Leak Detection (HVLD) method

✓ This method is employed to identify defective containers due to cracks and inappropriate sealing over the sidewall, bottom or closure areas

BM
Speed: 1.500 units per hour
Container size: 50-1000ml
Visual Inspection + Leak Detection

Convel offer – Automated Visual Inspection (Cont'd)

- BM Equipment
  - Loading is carried out manually by an operator.
  - An automatic pick-and-place robotic system transfers each container onto a dedicated holder installed on an intermittent motion central turret
  - The central turret is composed of five holders/stations in which the planned phases of visual inspection and leak detection are carried out
  - IV bags are then routed towards the outfeed otherwise are rejected and collected

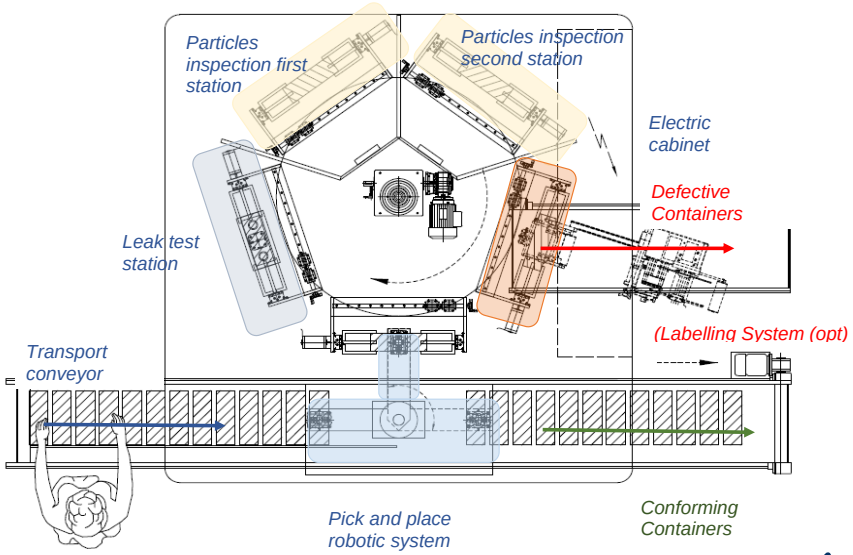

Convel offer – Automated Visual Inspection (Cont'd)

Leak Detection

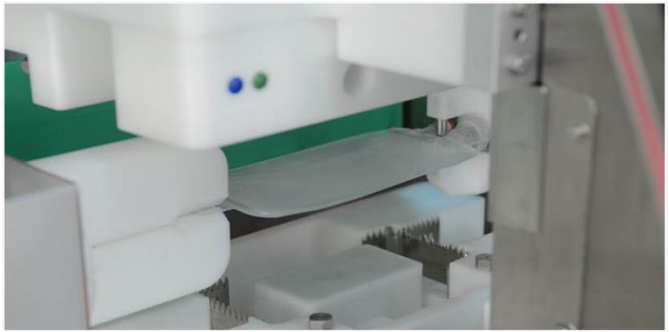
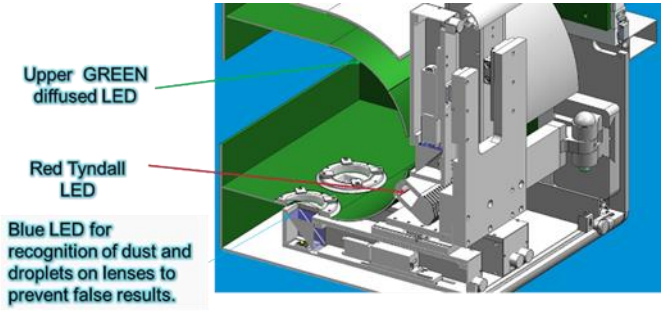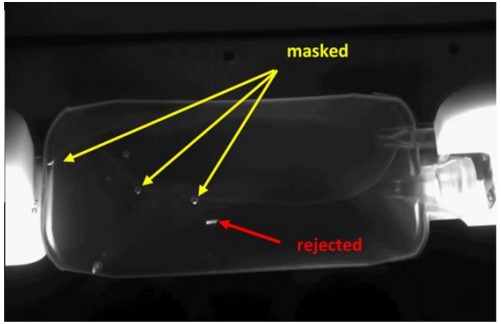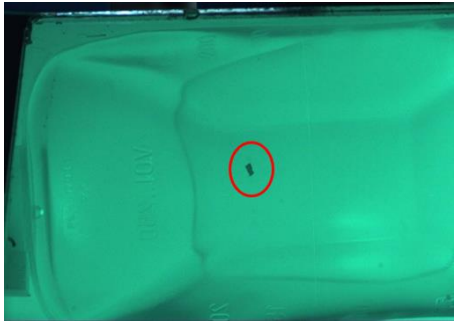
Visual Inspection